48505244

Socomec Countis P44-QCT 2 x 3Ph Quick Connect Multifunction Meter RS485

ENERGY METERS

Component type	Multifunction energy meter
Range	Countis P QCT
Model	N/A
Product status	Existing

The Socomec Countis P QCT range is a powerful, space-saving Quick Connect multifunction meter solution for dual (2QCT) and quad (4QCT) load monitoring. These Modbus (RS485) comms-enabled meters measure all system variables, including THDi & THDv. With a wide current range of 40A to 1000A, the Countis P QCT range is a quick and easy solution for multiload monitoring in panelboards and switchboards.

ELECTRICAL

Nominal voltage (Un) L-L	320-480 V
Nominal voltage (Un) N-L	184-276 V
Frequency	50-60 Hz
Supply voltage AC 50 Hz	100-277 V
Power consumption	1 W
Max. power dissipation	3 W
Self-powered	No
Pole type	Three conductor/four conductor
Accuracy class reactive energy according to IEC 62053-21	1
Accuracy class reactive energy according to IEC 62053-23	2
Measurement parameter kW	Yes
Measurement parameter kWh	Yes
Measurement parameter kVAR	Yes
Measurement parameter kVARh	Yes
Measurement parameter partial kVARh	Yes
Measurement parameter VA	Yes
Measurement parameter VAR	Yes
Measurement parameter PF	Yes
Measurement parameter Hz	Yes
Measurement parameter VL-L	Yes
Measurement parameter VL-N	Yes
Measurement parameter THD (I)	Yes
Measurement parameter THD (V,I)	Yes
Measurement parameter An	Yes
Measurement parameter ADMD	Yes

48505244

Socomec Countis P44-QCT 2 x 3Ph Quick Connect Multifunction Meter RS485

ENERGY METERS

ELECTRICAL	Measurement parameter AMAXDMD	Yes
	Measurement parameter W	Yes
COMMUNICATION	Configuration method	Keypad
	Supporting protocol for BACnet	No
	Supporting protocol for Modbus	Yes
CONSTRUCTION	Display	LCD
	Terminal type	Removable terminal block
	Mounting method	DRA (DIN-rail adaptor)
	With lock code	Yes
	Degree of protection (IP), front side	IP51
DIMENSIONS	Height	122.5 mm
	Width	71.7 mm
	Depth	66 mm
	Width in number of modular spacings	4
ENVIRONMENT	Operating temperature	-40…70 °C
	Storage temperature	-40…75 °C
	Humidity type	Non-condensing
	Pollution degree	2

DIMENSIONAL DIAGRAM

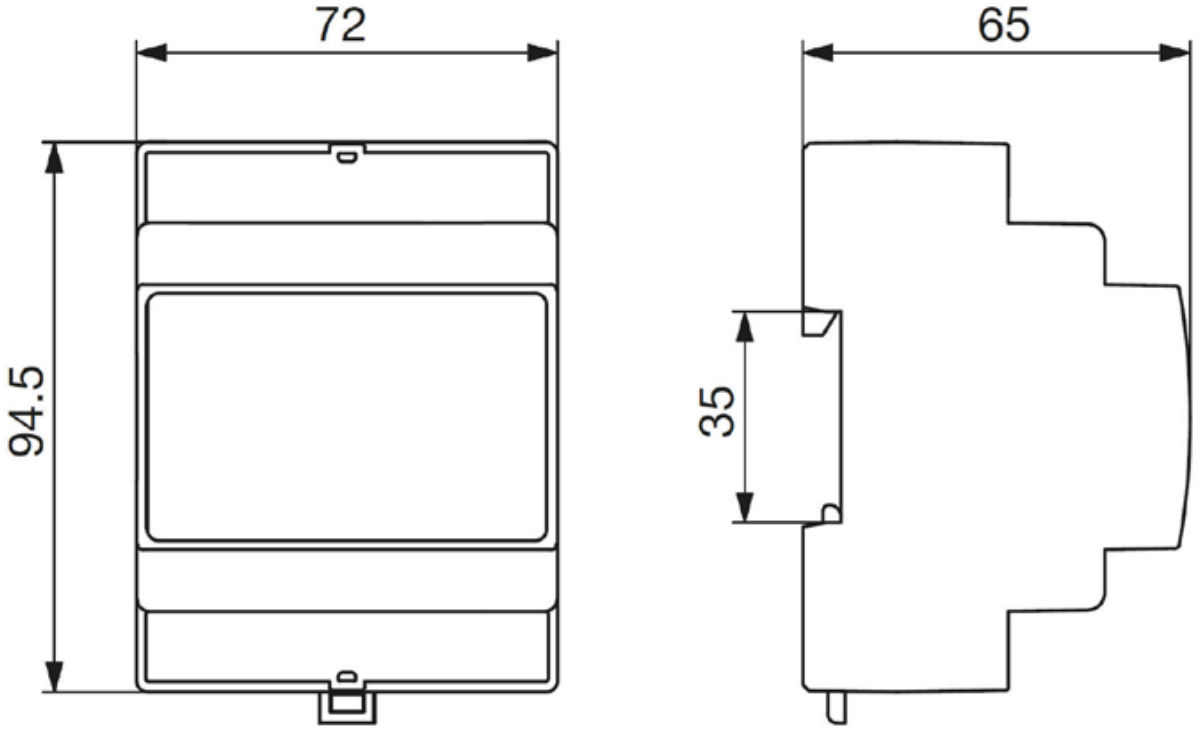

(mm)

ELECTRICAL CONNECTION DIAGRAM

Single-phase, 2-wire with 1 CT (1P+N)

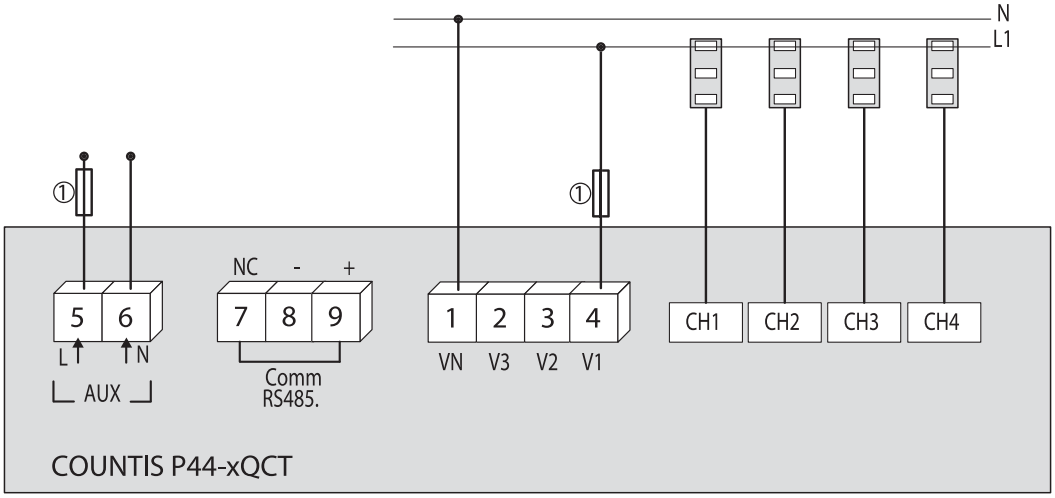

Three-phase, 4-wires with 3 CTs (3P+N)

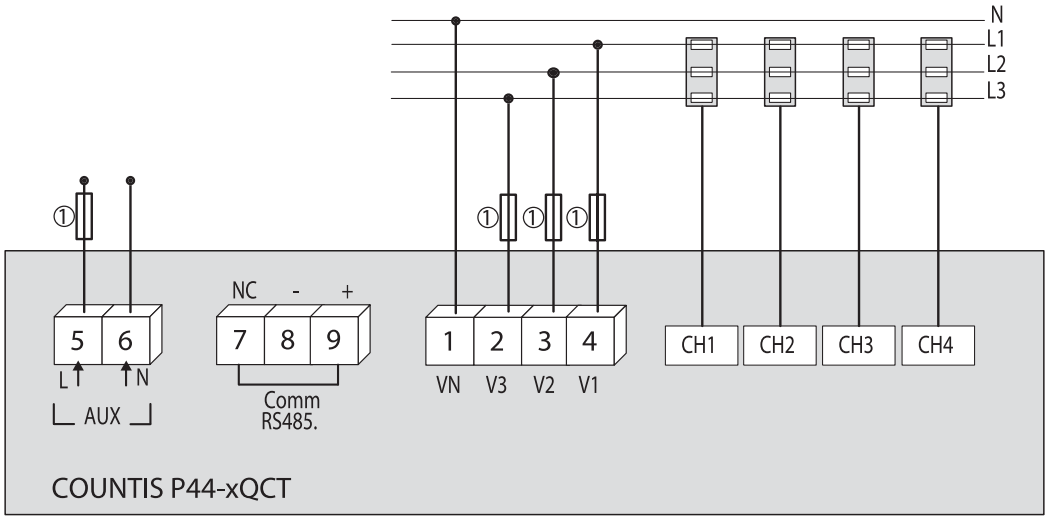

1. 1 A gG / 1 A class CC fuses.

RELATED PRODUCTS

ACCESSORY

Item No: 194S0425
Required: No
Description: Socomec P44-QCT 3Ph CT 40-160A 13.5 x 23mm Holes 24.8mm Centres

Item No: 194S0435
Required: No
Description: Socomec P44-QCT 3Ph CT 23-250A 21 x 21mm Holes 35mm Centres

Item No: 194S0436
Required: No
Description: Socomec P44-QCT 3Ph CT 23-250A 21 x 21mm Holes 35mm Centres 1m Cable

Item No: 194S0445
Required: No
Description: Socomec P44-QCT 3Ph CT 400-630A 31 x 31mm Holes 45mm Centres

Item No: 48290611
Required: No
Description: Socomec P44-QCT RJ12 x 1 CT Cable 1m

Item No: 48290612
Required: No
Description: Socomec P44-QCT RJ12 x 1 CT Cable 2m

Item No: 48290613
Required: No
Description: Socomec P44-QCT RJ12 x 1 CT Cable 3m