AMG210

nVent HOFFMAN MAS/ASR/SRE Depth Adjustment Kit for AMP and ADI D210mm

WALL MOUNT ENCLOSURES



Component type	Components for installation (enclosure/cabinet)
Range	SRE
Model	N/A
Product status	Existing

The nVent HOFFMAN SRE range has a 38-degree sloped roof, which is the angle of repose of coal dust and rain overhang over the enclosure door. Offering enhanced weather protection, eliminating dust build-up on the enclosure roof and minimising on-site maintenance. Includes a mounting plate and a range of optional accessories, simplifying installation and customisation to suit specific requirements.

Published on 05 August 2026

AMG210

nVent HOFFMAN MAS/ASR/SRE Depth Adjustment Kit for AMP and ADI D210mm

WALL MOUNT ENCLOSURES

DIMENSIONAL DIAGRAM

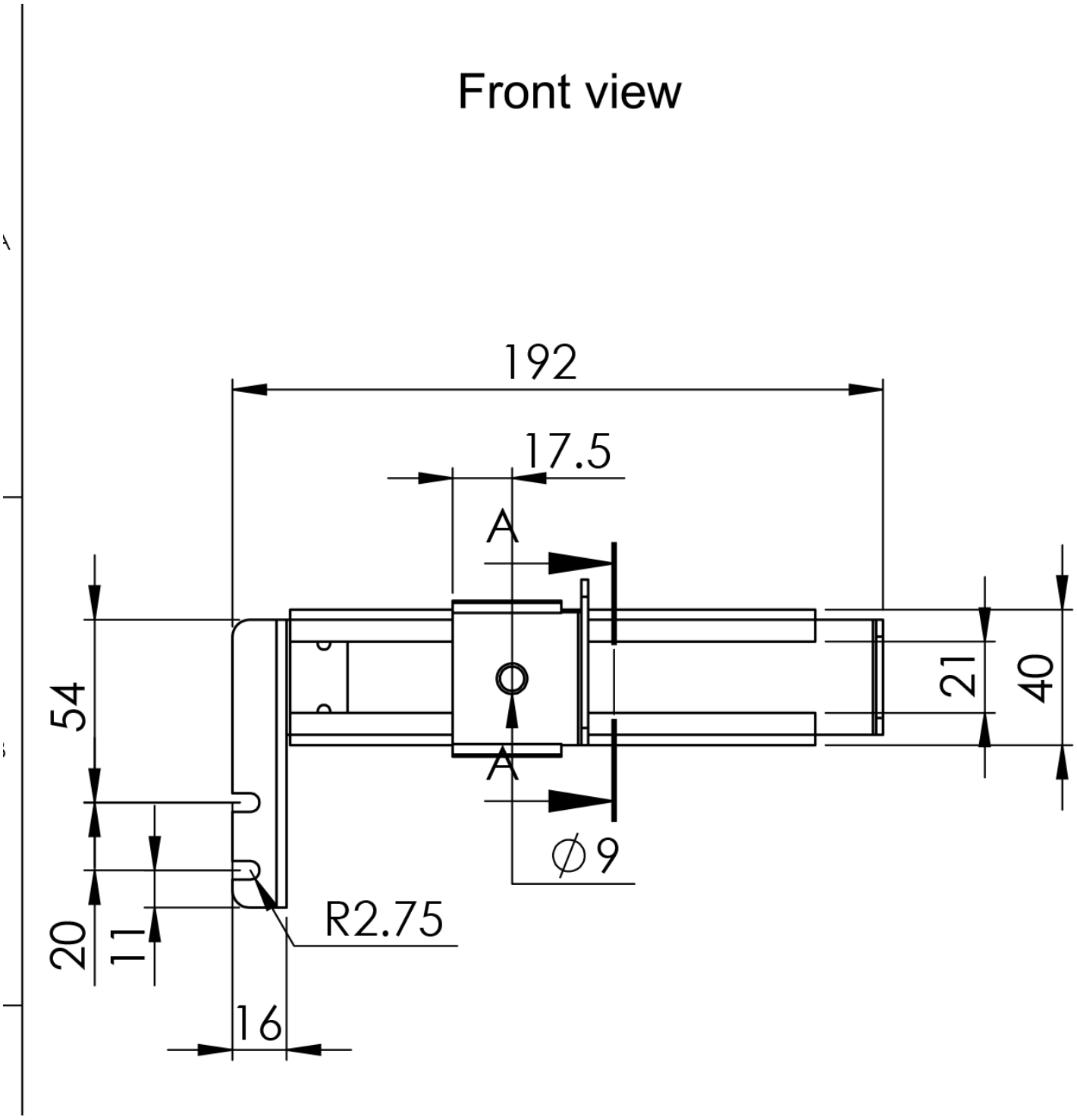

Published on 05 August 2026