48505044

Socomec Countis P44 Three Phase CT Connect Energy Meter 5A CT RS485

ENERGY METERS

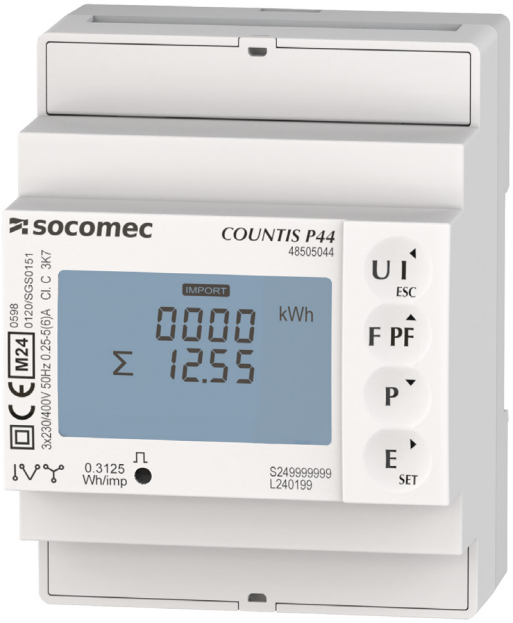

Component type	Kilowatt-hour meter
Range	Countis P
Model	N/A
Product status	Existing

The Socomec Countis P energy meter range delivers versatile and compact solutions, from direct-connect single-phase models to high-accuracy three-phase CT-connected meters. All models support bidirectional energy monitoring and Modbus RS845 communication, making them ideal for applications such as onsite renewables and EV charger monitoring.

ELECTRICAL	**Pole type**	Three conductor/four conductor
	Nominal current (In)	5 A
	Max. current (Imax)	6 A
	Nominal voltage (Un) N-L	230-230 V
	Nominal voltage (Un) L-L	400-400 V
	Frequency	50-60 Hz
	Supply voltage	100-277 V
	Type of electric connection	Screw connection
	Accuracy class	C
	Tariff type	Multi-tariff
	Tariff control	External
	Measurement type load profile	No
	Calibrated	Yes
	Power consumption	3 W
	Energy type	Effective power and blind power
COMMUNICATION	**Type of interface**	Modbus
	Pulse output	Optic
	Pulse type	S0
	With lock code	Yes
CONSTRUCTION	**Model**	Measurement transformer
	Type of meter	Electronic
	Suitable for	Purchase/supply
	Type of indication	Digital
	Mounting method	DRA (DIN-rail adapter)
	Degree of protection (IP), front side	IP51
	EEC40 signature	No

48505044

Socomec Countis P44 Three Phase CT Connect Energy Meter 5A CT RS485

ENERGY METERS

CONSTRUCTION	IP rating	IP20
MECHANICAL	Escapement mechanism	No
DIMENSIONS	Width	72 mm
	Depth	65 mm
	Height	94.5 mm
	Width in number of modular spacings	4
ENVIRONMENT	Operating temperature	-40…70 °C
CERTIFICATES/APPROVALS	Approval	Measuring Instruments Directive

DIMENSIONAL DIAGRAM

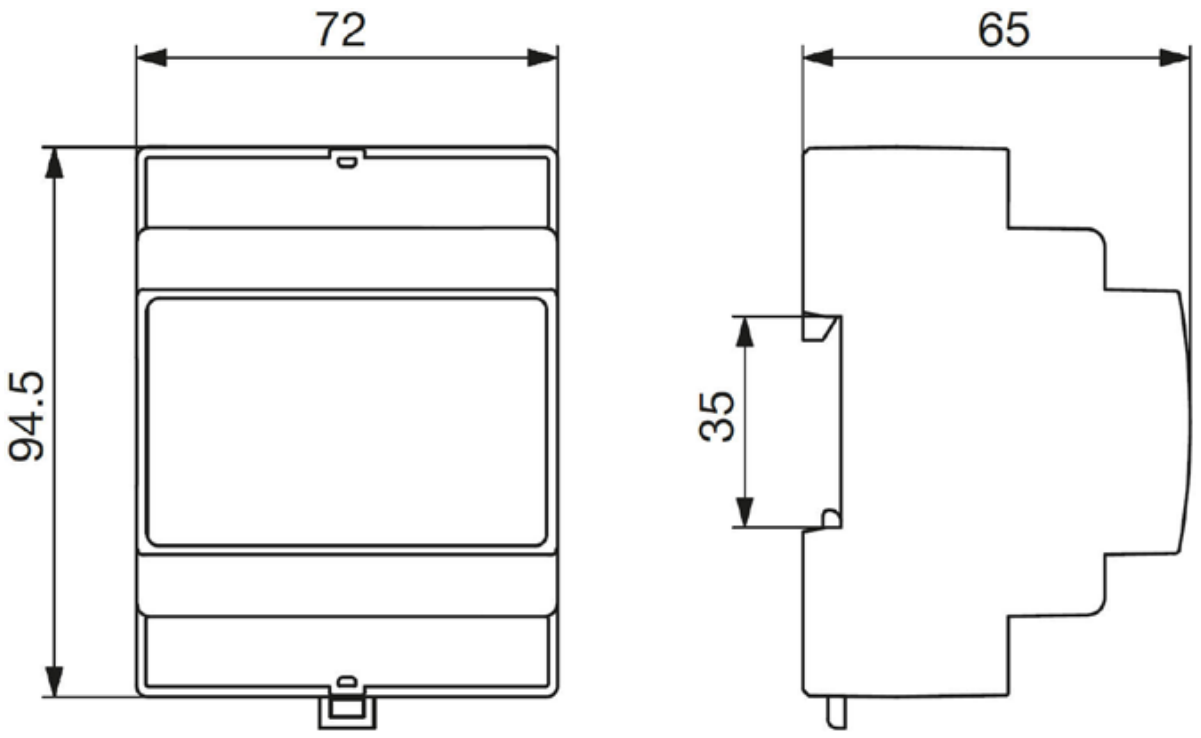

(mm)

48505044

Socomec Countis P44 Three Phase CT Connect Energy Meter 5A CT RS485

ENERGY METERS

ELECTRICAL CONNECTION DIAGRAM

Single-phase, 2-wire with 1 CT (1P+N)

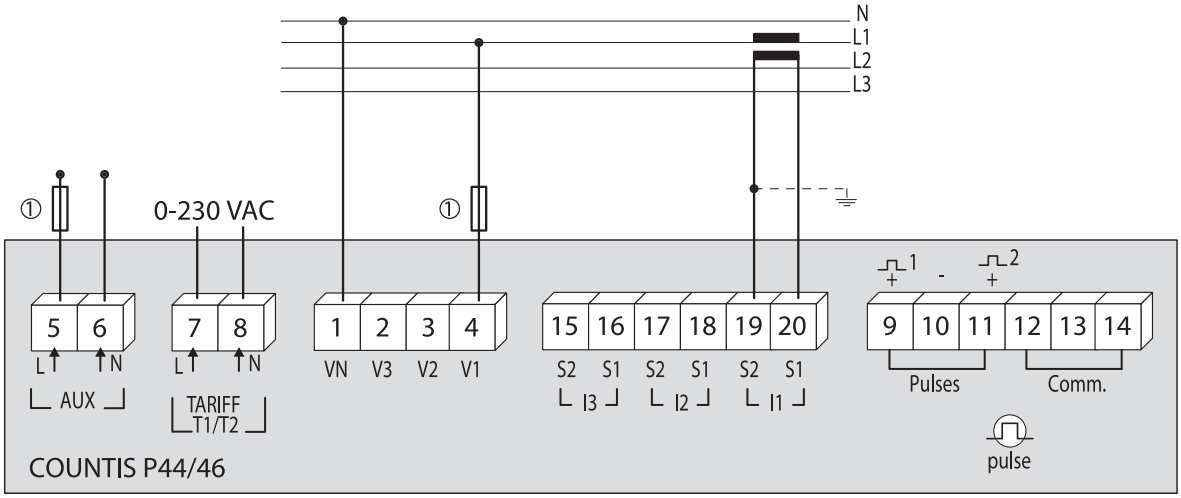

Three-phase, 4-wires with 3 CTs (3P+N)

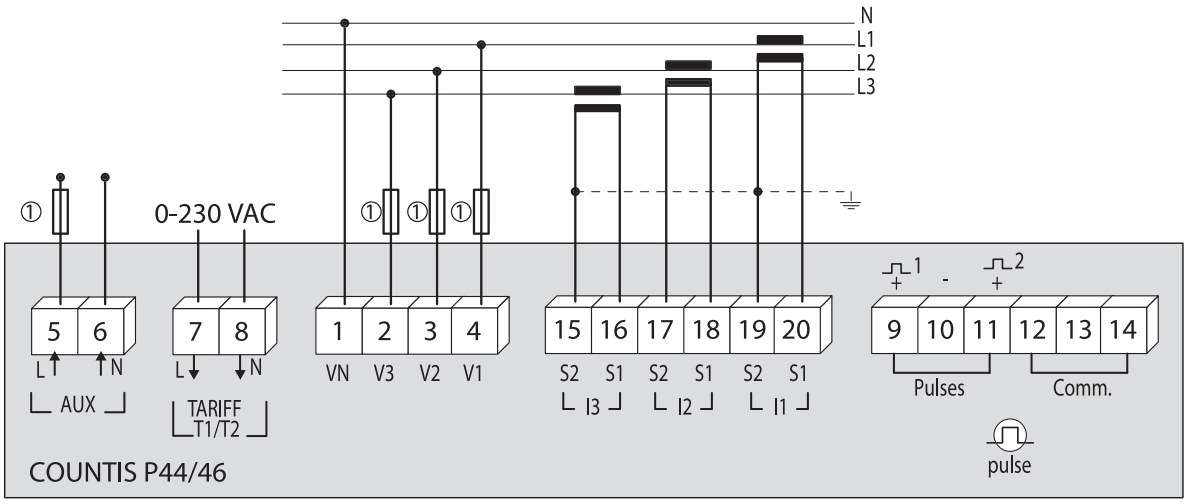

1. 1 A gG / 1 A class CC fuses.

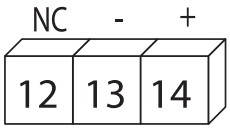

Published on 01 October 2026