48505004

Socomec Countis P04 Single Phase Direct Connect Energy Meter 45A RS485 Pulse Single DIN

ENERGY METERS

Component type	Kilowatt-hour meter
Range	Countis P
Model	N/A
Product status	Existing

The Socomec Countis P energy meter range delivers versatile and compact solutions, from direct-connect single-phase models to high-accuracy three-phase CT-connected meters. All models support bidirectional energy monitoring and Modbus RS845 communication, making them ideal for applications such as onsite renewables and EV charger monitoring.

ELECTRICAL	**Pole type**	Single phase
	Nominal current (In)	45 A
	Max. current (Imax)	45 A
	Nominal voltage (Un) N-L	230-230 V
	Frequency	50-60 Hz
	Supply voltage	184-276 V
	Type of electric connection	Screw connection
	Accuracy class	B
	Tariff type	Multi-tariff
	Tariff control	External
	Measurement type load profile	No
	Calibrated	Yes
	Power consumption	3 W
	Energy type	Effective power and blind power
COMMUNICATION	**Type of interface**	Modbus
	Pulse output	Optic
	Pulse type	S0
	With lock code	Yes
CONSTRUCTION	**Model**	Direct measurement
	Type of meter	Electronic
	Suitable for	Purchase/supply
	Type of indication	Digital
	Mounting method	DRA (DIN-rail adapter)
	Degree of protection (IP), front side	IP51
	EEC40 signature	No
	IP rating	IP20

48505004

Socomec Countis P04 Single Phase Direct Connect Energy Meter 45A RS485 Pulse Single DIN

ENERGY METERS

MECHANICAL	Escapement mechanism	No
DIMENSIONS	Width	18 mm
	Depth	68 mm
	Height	118 mm
	Width in number of modular spacings	1
ENVIRONMENT	Operating temperature	-40…70 °C
CERTIFICATES/APPROVALS	Approval	Measuring Instruments Directive

DIMENSIONAL DIAGRAM

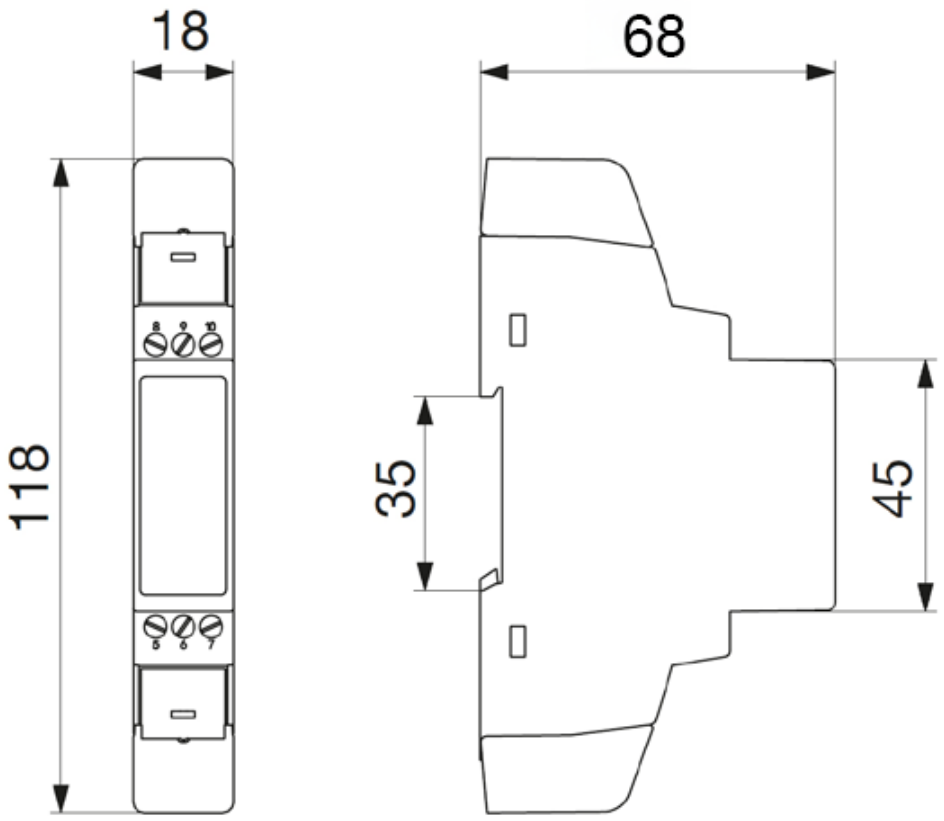

(mm)

ELECTRICAL CONNECTION DIAGRAM

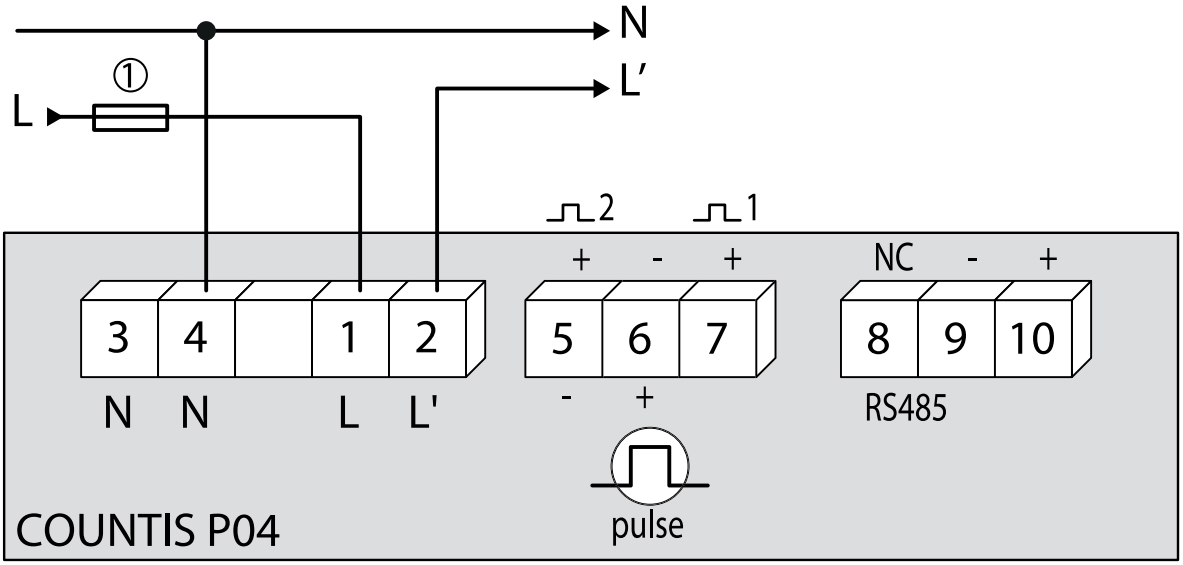

1. 45 A gG / 45 A class CC fuses.