20F11FC030JA0NNNNN

Allen-Bradley PowerFlex 753 VSD 400V Flange Mount 30A 15kW ND or 22A 11kW HD Frame 2

LARGE DRIVES



Component type	Frequency converter =< 1 kV
Range	PowerFlex 753
Model	N/A
Product status	Existing

The Allen-Bradley 753 AC Drives are a cost-effective and simple solution for general-purpose applications. Ideal for machine builders and system integrators wanting to minimise engineering costs while increasing productivity. Features built-in I/O as standard and available with a wide range of card options.

ELECTRICAL	Number of phases input	3
	Nominal input voltage	415 V
	Nominal output power AC	15 kW
	Nominal output current I2N	30 A
	kW rating, normal duty	15 kW
	kW rating, heavy duty	11 kW
	Dynamic braking transistor	Yes
	Control characteristic	PID
	EMC-version	Yes
COMMUNICATION	Integrated motion function	No
CONSTRUCTION	Suitable for safety functions	Yes
	Contains keypad	No
	Frame size	3
	IP rating	IP20

Published on 05 November 2026

20F11FC030JA0NNNNN

Allen-Bradley PowerFlex 753 VSD 400V Flange Mount 30A 15kW ND or 22A 11kW HD Frame 2

LARGE DRIVES

DIMENSIONAL DIAGRAM

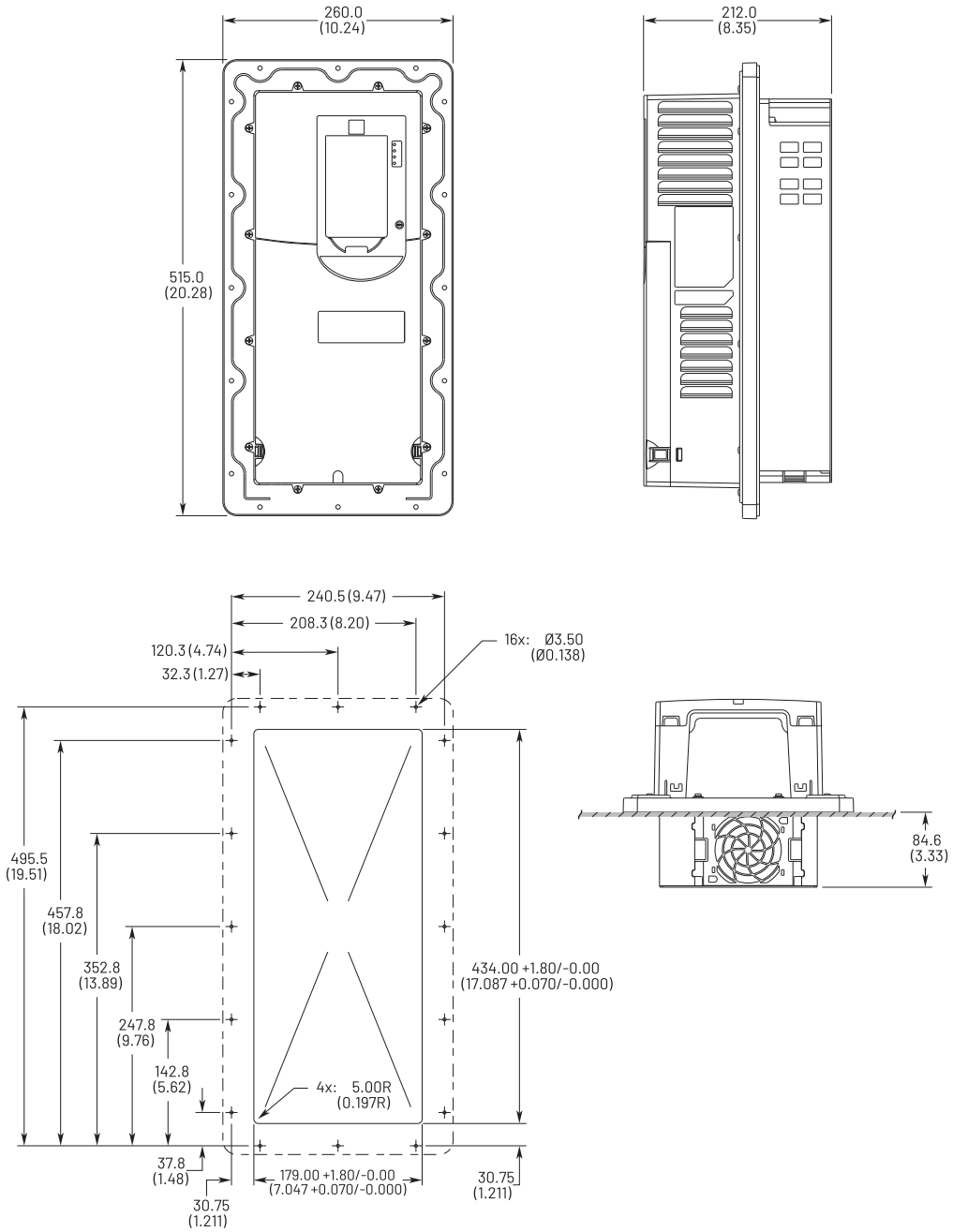

Dimensions are in millimeters and (inches).

Published on 05 November 2026

20F11FC030JA0NNNNN

Allen-Bradley PowerFlex 753 VSD 400V Flange Mount 30A 15kW ND or 22A 11kW HD Frame 2

LARGE DRIVES

RELATED PRODUCTS

ACCESSORY



Item No: 1202C03
Required: No
Description: Allen-Bradley PowerFlex Scanprint Cable Male Male 300mm



Item No: 1202C10
Required: No
Description: Allen-Bradley PowerFlex Scanprint Cable Male Male 1m



Item No: 1202C90
Required: No
Description: Allen-Bradley PowerFlex PF 7 750 9m Extention Cable to suit 20 HIM C6S



Item No: 1202H03
Required: No
Description: Allen-Bradley PowerFlex Scanprint Cable Male Female 300mm



Item No: 1202H10
Required: No
Description: Allen-Bradley PowerFlex Scanprint Cable Male Female 1m



Item No: 1202H30
Required: No
Description: Allen-Bradley PowerFlex Scanprint Cable Male Female 3m



Item No: 1202H90
Required: No
Description: Allen-Bradley SMC-Flex 9M Extension Cable To Suit 20-HIM-C3S



Item No: 1203S03
Required: No
Description: Allen-Bradley PowerFlex and SMC Scanprint Splitter Cable Type



Item No: 1203USB
Required: No
Description: Allen-Bradley PowerFlex and SMC USB Interface for CCW Support PF Drives and SMC Soft Starters



Item No: 13213R25B
Required: No
Description: Allen-Bradley 1321 Line Reactor 400 480V 3Phase IP20 25A 1.2mH



Item No: 1321RWR25DP
Required: No
Description: Allen-Bradley 1321 Reflective Wave Filter 400V 25A



Item No: 1769SM1
Required: No
Description: Allen-Bradley CompactLogix 1769 DPI Scanport Module



Item No: 1786TPS
Required: No
Description: Allen-Bradley ControlNet Media RG6 Coaxial Straight T-tap



Item No: 207501132C2R
Required: No
Description: Allen-Bradley PowerFlex 750 VSD 24V DC 11 Series IO Module 1AI 1AO 3DI and 2RO



Item No: 2075020COMM
Required: No
Description: Allen-Bradley PowerFlex 750 VSD Comm Carrier



Item No: 207502262C2R
Required: No
Description: Allen-Bradley PowerFlex 750 VSD 24V DC 22 Series IO Module 2AI 2AO 6DI and 2RO

Item No: 207502262D2R
Required: No
Description: Allen-Bradley PowerFlex 750 VSD 115V AC IO Card



Item No: 207502263C1R2T
Required: No
Description: Allen-Bradley PowerFlex 750 VSD 24V DC 22 Series IO Module 2AI 2AO 6DI 1RO and 2TO

RELATED PRODUCTS

ACCESSORY



Item No: 20750APS
Required: No
Description: Allen-Bradley PowerFlex 750 VSD 24V DC Auxiliary Power Supply Module



Item No: 20750ATEX
Required: No
Description: Allen-Bradley PowerFlex 750 VSD Thermistor Input Module Req 11 Series IO Module

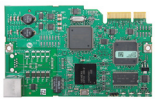

Item No: 20750BNETIP
Required: No
Description: Allen-Bradley PowerFlex 750 VSD BACnet IP Communication Module



Item No: 20750CNETC
Required: No
Description: Allen-Bradley PowerFlex 750 VSD Coaxial ControlNet Communication Module



Item No: 20750DENC1
Required: No
Description: Allen-Bradley PowerFlex 750 VSD Dual Incremental Encoder Module



Item No: 20750DNET
Required: No
Description: Allen-Bradley PowerFlex 750 VSD DeviceNet Communication Module



Item No: 20750EMC1F3
Required: No
Description: Allen-Bradley PowerFlex 750 VSD EMC Plate with Core Frame 3



Item No: 20750ENC1
Required: No
Description: Allen-Bradley PowerFlex 750 VSD Incremental Encoder Module



Item No: 20750ENETR
Required: No
Description: Allen-Bradley PowerFlex 750 VSD Dual Port EtherNet IP Communication Module



Item No: 20750NEMA1F3
Required: No
Description: Allen-Bradley PowerFlex 750 VSD IP30 Conversion Kit Frame 3



Item No: 20750PBUS
Required: No
Description: Allen-Bradley PowerFlex 750 VSD Profibus DPV1 Communication Module



Item No: 20750PNET
Required: No
Description: Allen-Bradley PowerFlex 750 VSD Single Port Profinet IO Communication Module



Item No: 20750PNET2P
Required: No
Description: Allen-Bradley PowerFlex 750 VSD Dual Port Profinet IO Communication Module



Item No: 20750S
Required: No
Description: Allen-Bradley PowerFlex 750 VSD Safe Torque Off Module



Item No: 20750S1
Required: No
Description: Allen-Bradley PowerFlex 750 VSD Safe Speed Monitor Module



Item No: 20750UFB1
Required: No
Description: Allen-Bradley PowerFlex 750 VSD Universal Feedback Encoder Module



Item No: 20COMMC
Required: No
Description: Allen-Bradley PowerFlex VSD Coaxial ControlNet Communication Module



Item No: 20COMMD
Required: No
Description: Allen-Bradley PowerFlex VSD DeviceNet Communication Module

20F11FC030JA0NNNNN

Allen-Bradley PowerFlex 753 VSD 400V Flange Mount 30A 15kW ND or 22A 11kW HD Frame 2

LARGE DRIVES

RELATED PRODUCTS

ACCESSORY



Item No: 20COMME
Required: No
Description: Allen-Bradley PowerFlex VSD Single Port EtherNet IP Communication Module



Item No: 20COMMH
Required: No
Description: Allen-Bradley PowerFlex VSD RS485 HVAC to DPI Communication Adaptor



Item No: 20COMMM
Required: No
Description: Allen-Bradley PowerFlex VSD Modbus TCP Communication Module



Item No: 20HIMA0
Required: No
Description: Allen-Bradley PowerFlex VSD Mount Blank Plate



Item No: 20HIMA6
Required: No
Description: Allen-Bradley PowerFlex VSD Mount LCD Display and Programmer



Item No: 20HIMB1
Required: No
Description: Allen-Bradley PowerFlex VSD Progammer Panel Mount Bezal Kit



Item No: 20HIMC6S
Required: No
Description: Allen-Bradley PowerFlex VSD Remote Panel Mount IP66 LCD Display and Programmer including 3m Cable



Item No: 20HIMH10
Required: No
Description: Allen-Bradley PowerFlex VSD Remote Programmer Cable 1m



Item No: 20XCOMMACPS1
Required: No
Description: Allen-Bradley PowerFlex VSD External DPI Comm AC Power Supply



Item No: 20XCOMMDCBASE
Required: No
Description: Allen-Bradley PowerFlex VSD External Comm Kit DC Base

Item No: 20XCOMMIOOPT1
Required: No
Description: Allen-Bradley PowerFlex VSD External DPI Comm IO Option 1

Published on 05 November 2026