# NTIS50

**Mersen BS Fuse gG Size A3 73mm Centres 500V AC 50A**

PANELBOARDS
MODULAR




| | |
|---|---|
| **Component type** | HRC fuse |
| **Range** | BS Fuses |
| **Model** | N/A |
| **Product status** | Existing |

NHP's British Standard (BS) Fuses offer a reliable and cost-effective solution for protecting electrical systems against overcurrent and short-circuit faults. The NHP BS Fuses conform to BS 88, which sets out requirements for the design, performance, and testing of fuses used in electrical systems in the UK and wider geographies.

| | | |
|---|---|---|
| **ELECTRICAL** | **Type of current** | AC |
| | **Rated voltage AC** | 500 V |
| | **Utilization category** | gL/gG (cable protection/equipment protection) |
| | **Breaking capacity** | 80 kA |
| **CONSTRUCTION** | **Fuse construction type according to IEC 60269** | A3 |
| **DIMENSIONS** | **Centre-to-centre distance of connections** | 73 mm |
| | **Height** | 88.5 mm |
| | **Width** | 17.5 mm |
| | **Depth** | 17.5 mm |



Published on 24 March 2026

# NTIS50

**Mersen BS Fuse gG Size A3 73mm Centres 500V AC 50A**

PANELBOARDS
MODULAR

## DIMENSIONAL DIAGRAM

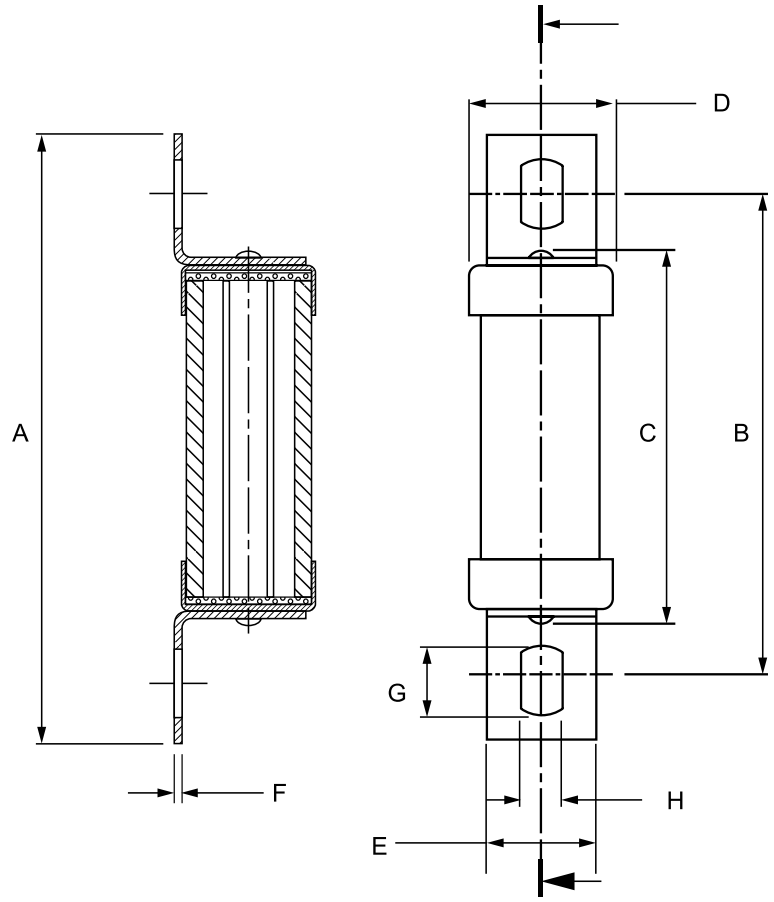


| Series | Category | Brand | A Overall Length | B Fitting Centres | C Body Length | D Body Diameter | E Tag Width | F Tag Thickness | G Hole Length | H Hole Width |
|---|---|---|---|---|---|---|---|---|---|---|
| **NTIA 2 – 32** | A2 | Mersen | 84.5 | 73 | 55 | 13.5 | 8.7 | 1.2 | 8 | 5.5 |
| **NTIA 32M** | A2 | Mersen | 86 | 73 | 49 | 21.9 | 9 | 1.2 | 8 | 5.5 |
| **NTIS 36 – 63** | A3 | Mersen | 88.5 | 73 | 56 | 17.5 | - | 1.2 | - | 5.5 |
| **NTIS 80 – 100** | A3 | Mersen | 89 | 73 | 49 | 26.9 | 13 | 1.2 | - | 5.5 |
| **NTIS 63M** | A3 | Mersen | 89 | 73 | 49 | 26 | 13 | 1.2 | - | 5.5 |
| **NTIS 100M** | A3 | Mersen | 89 | 73 | 49 | 26 | 13 | 1.2 | - | 5.5 |
| **NOS 80 - 100** | as A3 | FuseMaster | 89 | 73 | 49 | 26 | 13 | 1.2 | - | 5.5 |
| **NOS 100M** | as A3 | Lawson | 89 | 73 | 49 | TBC | 13 | 1.2 | - | 5.5 |



Published on 24 March 2026