NES25

Mersen BS Fuse gG Size F2 69mm Centres 415V AC 25A

PANELBOARDS
MODULAR



Component type	HRC fuse
Range	BS Fuses
Model	N/A
Product status	Existing

NHP's British Standard (BS) Fuses offer a reliable and cost-effective solution for protecting electrical systems against overcurrent and short-circuit faults. The NHP BS Fuses conform to BS 88, which sets out requirements for the design, performance, and testing of fuses used in electrical systems in the UK and wider geographies.

ELECTRICAL	Type of current	AC
	Rated voltage AC	500 V
	Utilization category	gL/gG (cable protection/equipment protection)
	Breaking capacity	80 kA
CONSTRUCTION	Fuse construction type according to IEC 60269	F2
DIMENSIONS	Height	69 mm
	Width	17.5 mm
	Depth	17.5 mm

Published on 23 March 2026

NES25

Mersen BS Fuse gG Size F2 69mm Centres 415V AC 25A

PANELBOARDS
MODULAR

DIMENSIONAL DIAGRAM

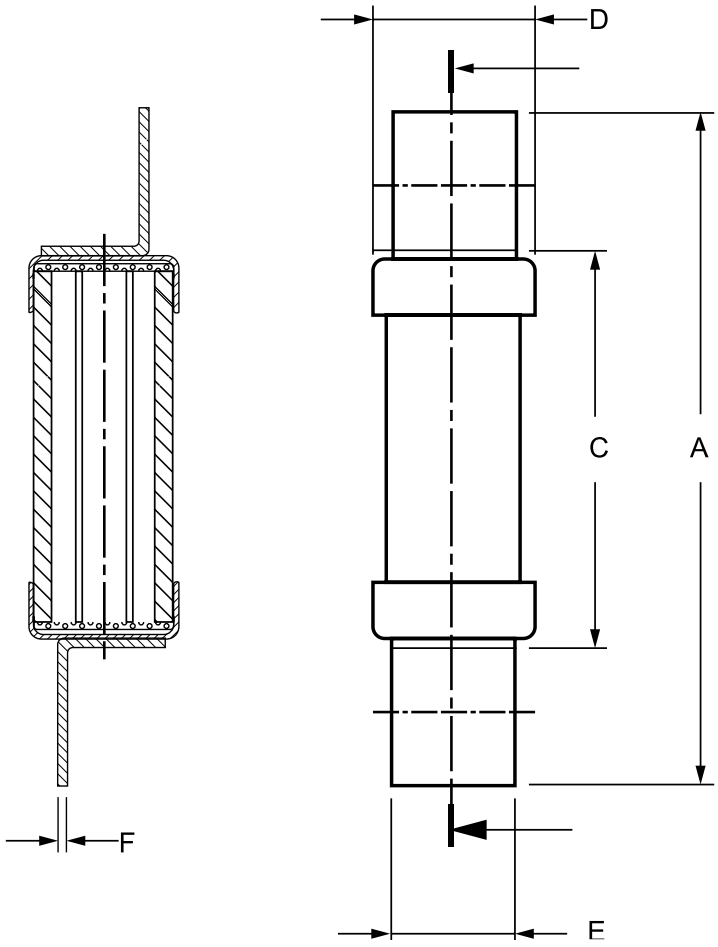

Series	Category	Brand	A Overall Length	B Fitting Centres	C Body Length	D Body Diameter	E Tag Width	F Tag Thickness	G Hole Length	H Hole Width
NNS2-32	F1	FuseMaster	60.0	-	35.0	14.2	11.0	0.8	-	-
NNS20M	F1	FuseMaster	62.0	-	35.0	14.3	11.5	0.8	-	-
NNS32M	F1	FuseMaster	62.0	-	39.0	17.5	11.5	0.8	-	-
NES20-63	F2	FuseMaster	69.0	-	39.0	17.5	15.0	1.4	-	-

Published on 23 March 2026