# MPSARCA5040P

**Fibox ARCA Mounting Plate Insulated suits ARCA H500 x W400mm**

WALL MOUNT ENCLOSURES



| | |
|---|---|
| **Component type** | Mounting plate for distribution board |
| **Range** | ARCA |
| **Model** | N/A |
| **Product status** | Existing |

The Fibox ARCA enclosures provide the strength of steel at a fraction of the weight. The enclosures are corrosion resistant, customisable and highly UV resistant, suited to outdoor installations, including marine environments. RF-transparency makes them ideal for telemetry applications, suitable for pole and gantry mounting. Easy install accessories and a life expectancy is in excess of 25 years.

| | | |
|---|---|---|
| **CONSTRUCTION** | **Material** | Plastic |
| | **Perforated** | No |
| **DIMENSIONS** | **Height** | 450 mm |
| | **Width** | 350 mm |





Published on 02 November 2026

# MPSARCA5040P

**Fibox ARCA Mounting Plate Insulated suits ARCA H500 x W400mm**

WALL MOUNT ENCLOSURES

## DIMENSIONAL DIAGRAM

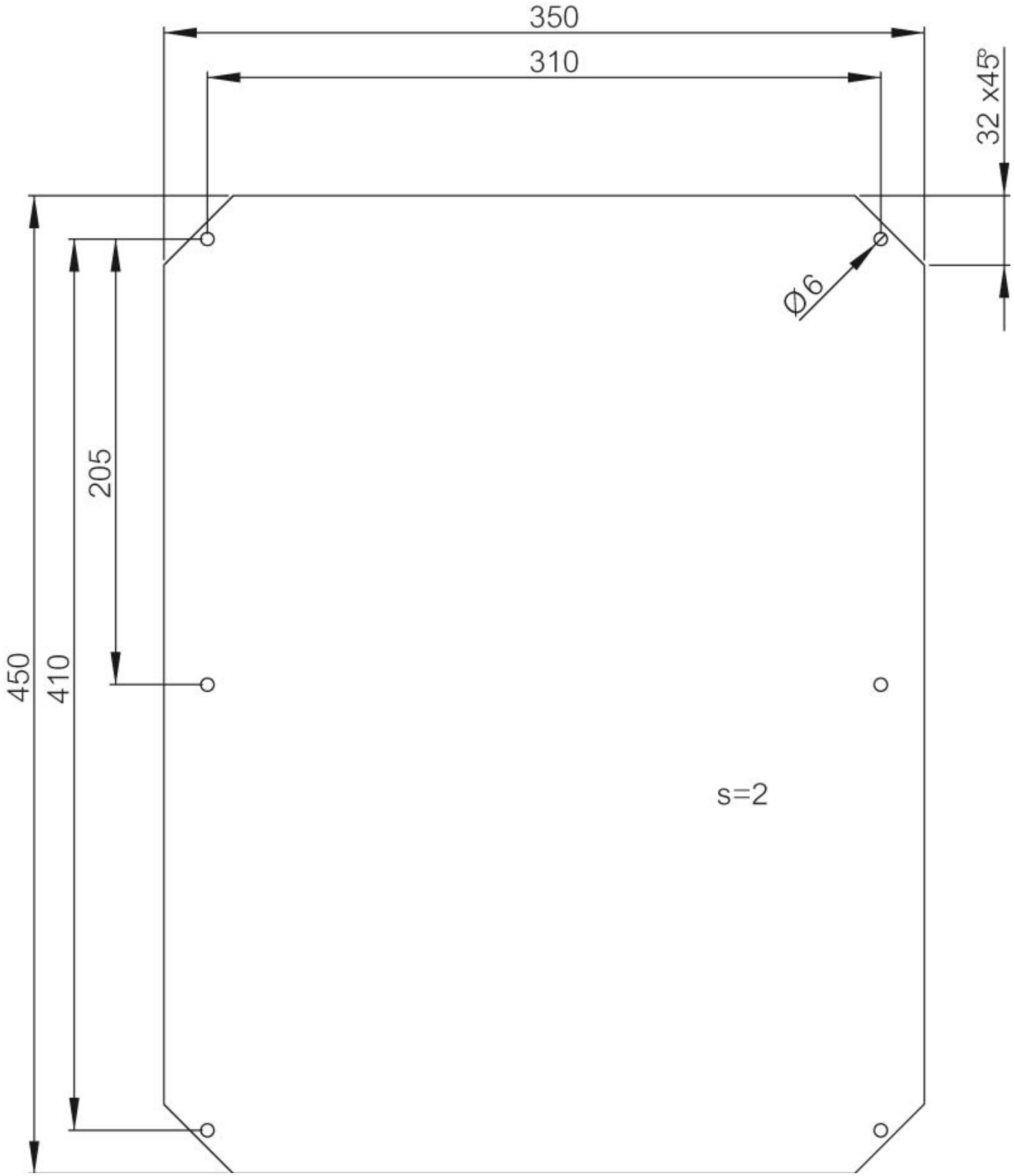




Published on 02 November 2026