MOLEDTLMLCP10

Moflash LEDTL Stack Light L Shape Stand Base with 10mm Pole and Cap Blac

STACK LIGHTS



Component type	Stand for signal tower with tube
Range	Stack Light
Model	N/A
Product status	Existing

The Moflash range of 70mm LED Stack Light Beacons are a versatile and efficient status indication solution in light commercial and industrial applications. Offered in a range of light (steady and flashing status) and sound (continuous and pulsating) modules, designed for easy stacking. LED beacons provide highly visible light output and long operational life.

CONSTRUCTION	**Material**	Plastic
	Colour	Black
DIMENSIONS	**Tube length**	100 mm

Published on 09 September 2026

MOLEDTLMLCP10

Moflash LEDTL Stack Light L Shape Stand Base with 10mm Pole and Cap Blac

STACK LIGHTS

DIMENSIONAL DIAGRAM

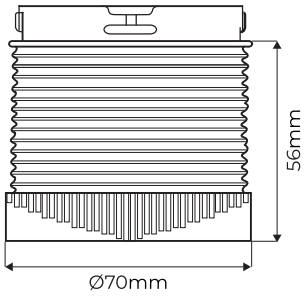

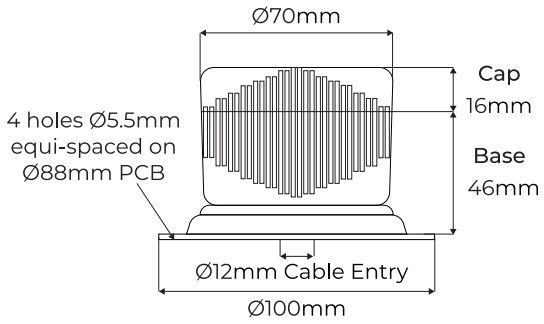

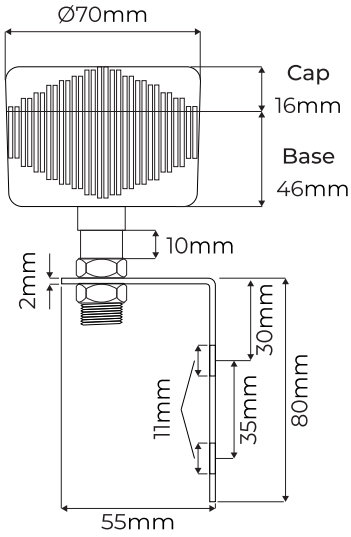

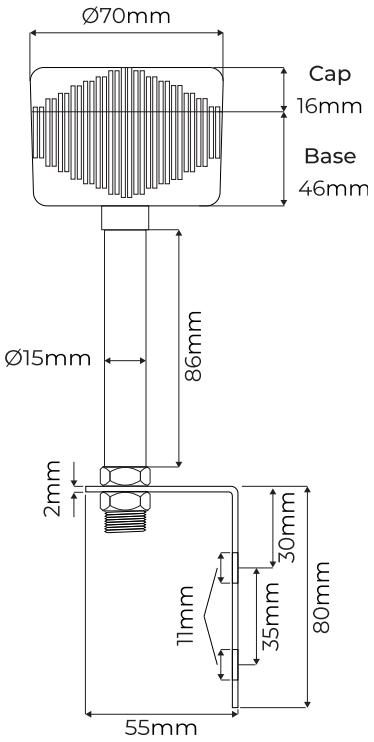

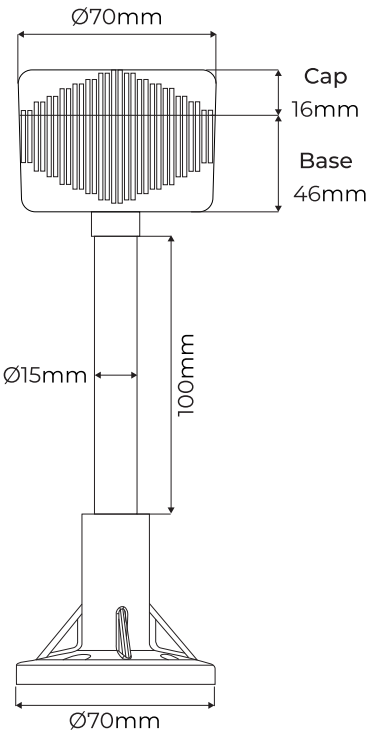

Published on 09 September 2026