LA7801753

Sprecher and Schuh L7 Switch Body 3 Pole Off On 80A Base Mount

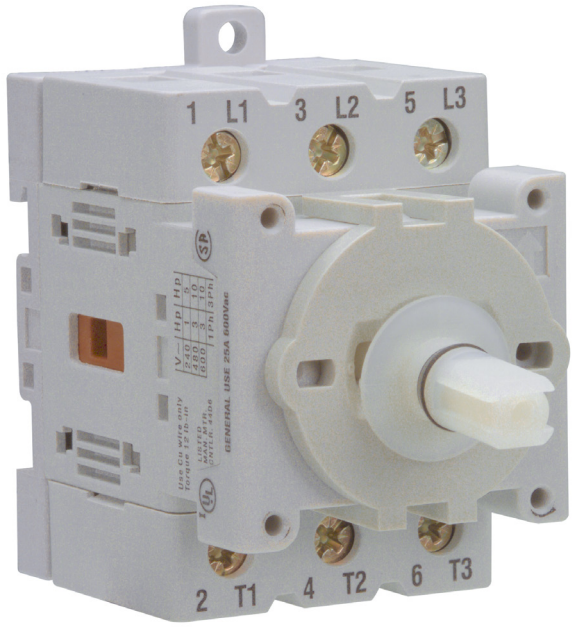

Component type	Off-load switch
Range	L7 Loadbreak Switch
Model	N/A
Product status	Existing

The Sprecher + Schuh L7 line is compact, reliable and the ideal choice for all disconnect applications. All accessories snap-on and off for quick assembly. The L7's modular design allows for multiple combinations and use of universal accessories. Available in base (LA7) and panel (LE7) mount options up to 100A with easy selection, needing only two part numbers to build a complete switch assembly.

ELECTRICAL	Number of poles	3
	Rated operation power at AC-3, 400 V	30 kW
	Rated operation current Ie at AC-21a, 690V	80 A
	Rated operation current Ie at AC-1, 690V	80 A
	Ithe, thermal current (enclosed)	80 A
	Ith, thermal current (open)	100 A
	Number of auxiliary contacts as normally closed contact	0
	Number of auxiliary contacts as normally open contact	0
CONSTRUCTION	Model	On/Off switch
	Mounting method	DIN rail
	Material housing	Plastic
	Wire/conductor size, rigid cable	4-35 mm²
	Wire/conductor size, flex cable	4-50 mm²
	Degree of protection (IP), front side	IP20
	Suitable for front mounting	No
	Complete device in housing	No
MECHANICAL	With zero (off) position	Yes
	Mechanical life (service cycles)	200000 cycles
	Number of switch positions	2
DIMENSIONS	Depth	89 mm
	Width	72 mm
	Height	90 mm
ENVIRONMENT	Operating temperature	-25…60 °C

Published on 21 July 2026

LA7801753

Sprecher and Schuh L7 Switch Body 3 Pole Off On 80A Base Mount

DIMENSIONAL DIAGRAM

LA 7 - base mounted switches - 3 pole (16 ... 100 A)

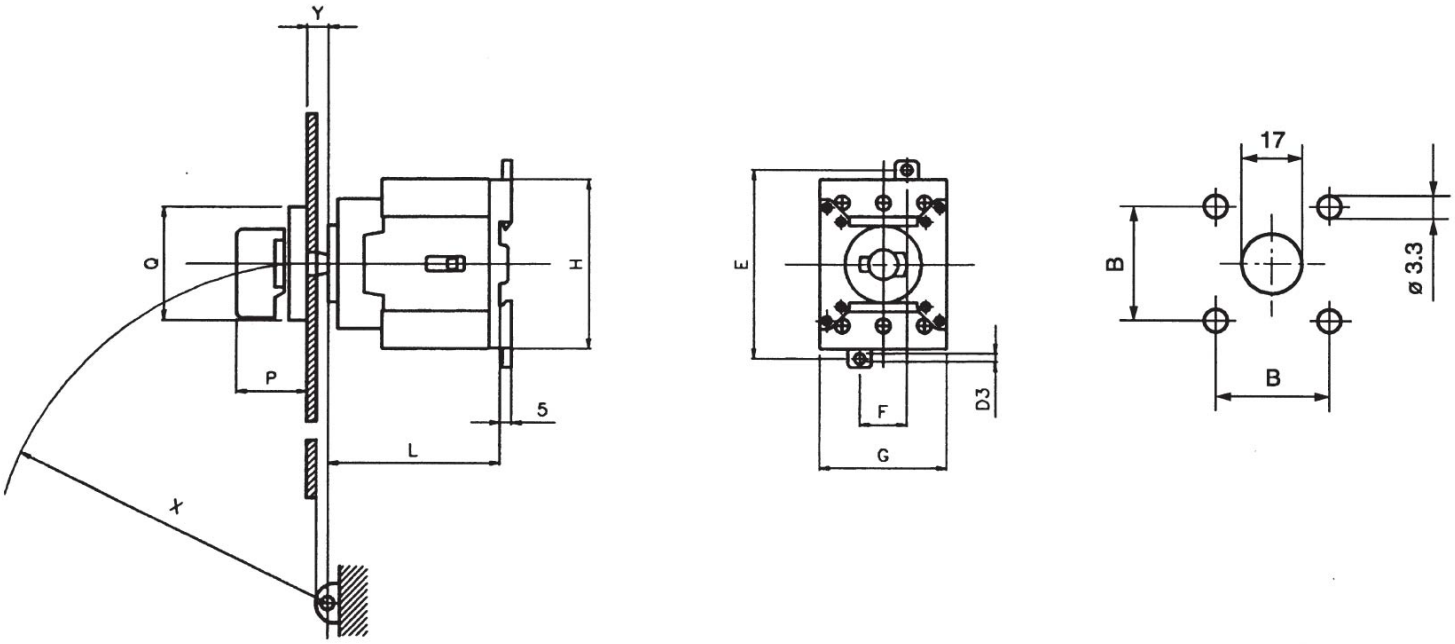

Type	D3	E	F	G	H	L
LA 7-16	4.5	70	11	36	63	55
LA 7-25/32	4.5	70	15	45	64	59
LA 7-40/63	4.5	80	20	54	72	73
LA 7-80/100	5.6	95	25	72	90	89

Type	Y min.	X ≥	Y max.	L ≥
LA 7-25/32	5	142	9.5	90
LA 7-40/63	2.5	150	9.5	90
LA 7-80/100	2.5	150	9.5	90

RELATED PRODUCTS

ACCESSORY



Item No: L780C3

Required: No

Description: Sprecher and Schuh L7 Terminal Cover 3 Pole suits LE and LA780 and 100 (QTY 1)

Item No: L7G3662

Required: No

Description: Sprecher and Schuh L7 Mechanical Coupling 6 Pole for L780 and 100

Item No: L7G3666

Required: No

Description: Sprecher and Schuh L7 Enclosure Plastic 175W x 230H x 120D suits LA740-63 (6P) and LA780-100 (3/4P)



Item No: L7G3687

Required: No

Description: Sprecher and Schuh L7 Shaft Metal 44mm for LA7 and LA2

Published on 21 July 2026

LA7801753

Sprecher and Schuh L7 Switch Body 3 Pole Off On 80A Base Mount

RELATED PRODUCTS

ACCESSORY



Item No: L7G3707
Required: No
Description: Sprecher and Schuh L7 Shaft Metal 54mm for LA7 and LA2

Item No: LA2G2830
Required: No
Description: Sprecher and Schuh L2 Cam Switch Shaft Extension Standard 44mm

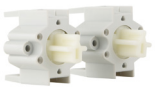

Item No: LA2G2853
Required: No
Description: Sprecher and Schuh L2 Cam Switch Shaft Extension including Coupling 24mm

Item No: LA2G3194
Required: No
Description: Sprecher and Schuh L2 Cam Switch Shaft Extension Standard 52mm

Item No: LA2G3195
Required: No
Description: Sprecher and Schuh L2 Cam Switch Shaft Extension Standard 57mm



Item No: LA2G3393
Required: No
Description: Sprecher and Schuh L2 Cam Switch Metal Shaft Short Yellow 235mm



Item No: LA2G3394
Required: No
Description: Sprecher and Schuh L2 Cam Switch Metal Shaft Long Yellow 350mm

Item No: LA2G3399
Required: No
Description: Sprecher and Schuh L2 Cam Switch Insert To Modify Metal Shaft to Switch Any Position White



Item No: LA7100PE
Required: No
Description: Sprecher and Schuh L7 Earth Terminal for LA780 and LA7100

Item No: LA7100TN
Required: No
Description: Sprecher and Schuh L7 Neutral Terminal for LA780 and LA100



Item No: LA7P11
Required: No
Description: Sprecher and Schuh L7 Auxiliary Contact 1 N.O + 1 N.C for LA716 to LA7100



Item No: LA7P22
Required: No
Description: Sprecher and Schuh L7 Auxiliary Contact 2 N.O + 2 N.C for LA716 to LA7100

Item No: LA7PD10
Required: No
Description: Sprecher and Schuh L7 Auxiliary Contact 1 N.O E.B for LA725 to LA7100

Item No: LA7PL11
Required: No
Description: Sprecher and Schuh L7 Auxiliary Contact 1 N.O + 1 N.C E.M L.B for LA716 to LA7100



Item No: LFS2A6175
Required: No
Description: Sprecher and Schuh L7 Handle Std Type A BK/Silver Screw Fixing Mount 67 x 67mm Engraved O I



Item No: LFS2A6175I
Required: No
Description: Sprecher and Schuh L7 Handle Std Type A BK/Silver Screw Fixing Mount 67 x 67mm Engraved OFF ON



Item No: LFS2A6375
Required: No
Description: Sprecher and Schuh L7 Handle Std Type A BK/Silver Screw Fixing Mount 67 x 67mm Engraved 1 0 2



Item No: LFS2E6175
Required: No
Description: Sprecher and Schuh L7 Handle Std Padlock Type E BK/Silver Screw Fixing Mount 67 x 67mm Engraved O I

Published on 21 July 2026

LA7801753

Sprecher and Schuh L7 Switch Body 3 Pole Off On 80A Base Mount

RELATED PRODUCTS

ACCESSORY



Item No: LFS2G6175

Required: No

Description: Sprecher and Schuh L7 Handle Disc Padlock Type G BK/GY Screw Fixing Mount 67 x 67mm Engraved OFF ON

Item No: LFS2G8175

Required: No

Description: Sprecher and Schuh L7 Handle Disc Padlock Type G BK/GY Screw Fixing Mount 90 x 90mm Engraved OFF ON



Item No: LFS2I8175I

Required: No

Description: Sprecher and Schuh L7 Handle Std Type I RD/YL Screw Fixing Mount 88 x 88mm Engraved OFF ON

Item No: LFS2L6175

Required: No

Description: Sprecher and Schuh L7 Handle Std Padlock Type L RD/YL Screw Fixing Mount 64 x 64mm Engraved O I



Item No: LFS2N6175

Required: No

Description: Sprecher and Schuh L7 Handle Disc Padlock Type G RD/YL Screw Fixing Mount 67 x 67mm Engraved OFF ON

Published on 21 July 2026