ISOSO510RCDPRO

NHP ISO Socket Outlet - RCD, 5 Round Pins 20A 500V AC, with Base, Resistant Orange



Component type	Socket outlet according to AS/NZS 3123
Range	ISO
Model	N/A
Product status	Existing

The often overlooked essentials that are always indispensable. Choose from NHP's range of 400+ industrial, isolating and high-current plugs, sockets and switches available for a wide breadth of applications.

ELECTRICAL	Nominal voltage	500 V
	Rated current	10 A
	RCD rating	30 mA
	Number of phases	3
	With neutral conductor contact	Yes
	With earth leakage switch	Yes
CONSTRUCTION	Material	Plastic
	Colour	Orange
	Type of cover	Hinged lid
	Number of active pins (round)	5
	With base	Yes
	Resistant to chemicals	Yes
	IP rating	IP66
DIMENSIONS	Base depth	63 mm
	Conductor cross section solid (solid, stranded)	1.5-6 mm²
	Height	294 mm
	Width	101 mm

Published on 29 June 2026

ISOSO510RCDPRO

NHP ISO Socket Outlet - RCD, 5 Round Pins 20A 500V AC, with Base, Resistant Orange

DIMENSIONAL DIAGRAM

M32 CONDUIT ENTRY

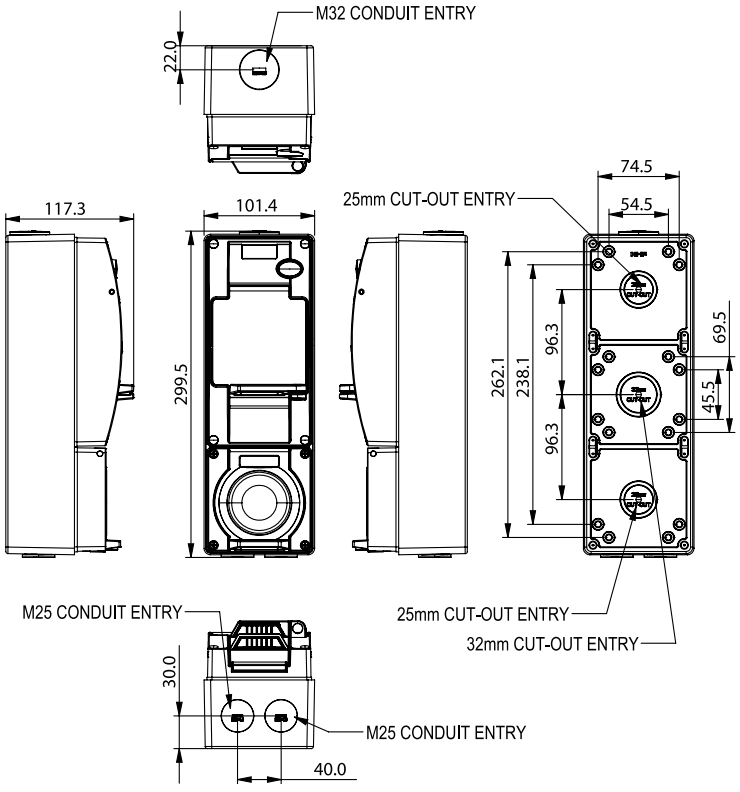

Published on 29 June 2026