ISOSO320PG

NHP ISO Socket Outlet, 3 Round Pins 20A 250V AC, w/ Base, Grey

ISO
INDUSTRIAL PLUGS AND SOCKETS



Component type	Socket outlet according to AS/NZS 3123
Range	ISO
Model	N/A
Product status	Existing

The often overlooked essentials that are always indispensable. Choose from NHP's range of 400+ industrial, isolating and high-current plugs, sockets and switches available for a wide breadth of applications.

ELECTRICAL	Nominal voltage	250 V
	Rated current	20 A
CONSTRUCTION	Material	Plastic
	Colour	Grey
	Number of active pins (round)	3
	With base	Yes
	IP rating	IP66
DIMENSIONS	Base depth	63 mm
	Conductor cross section solid (solid, stranded)	2.5-6 mm²
	Height	101 mm
	Width	101 mm
	Depth	63 mm

Published on 29 June 2026

ISOSO320PG

NHP ISO Socket Outlet, 3 Round Pins 20A 250V AC, w/ Base, Grey

NHP ISO
INDUSTRIAL PLUGS AND SOCKETS

DIMENSIONAL DIAGRAM

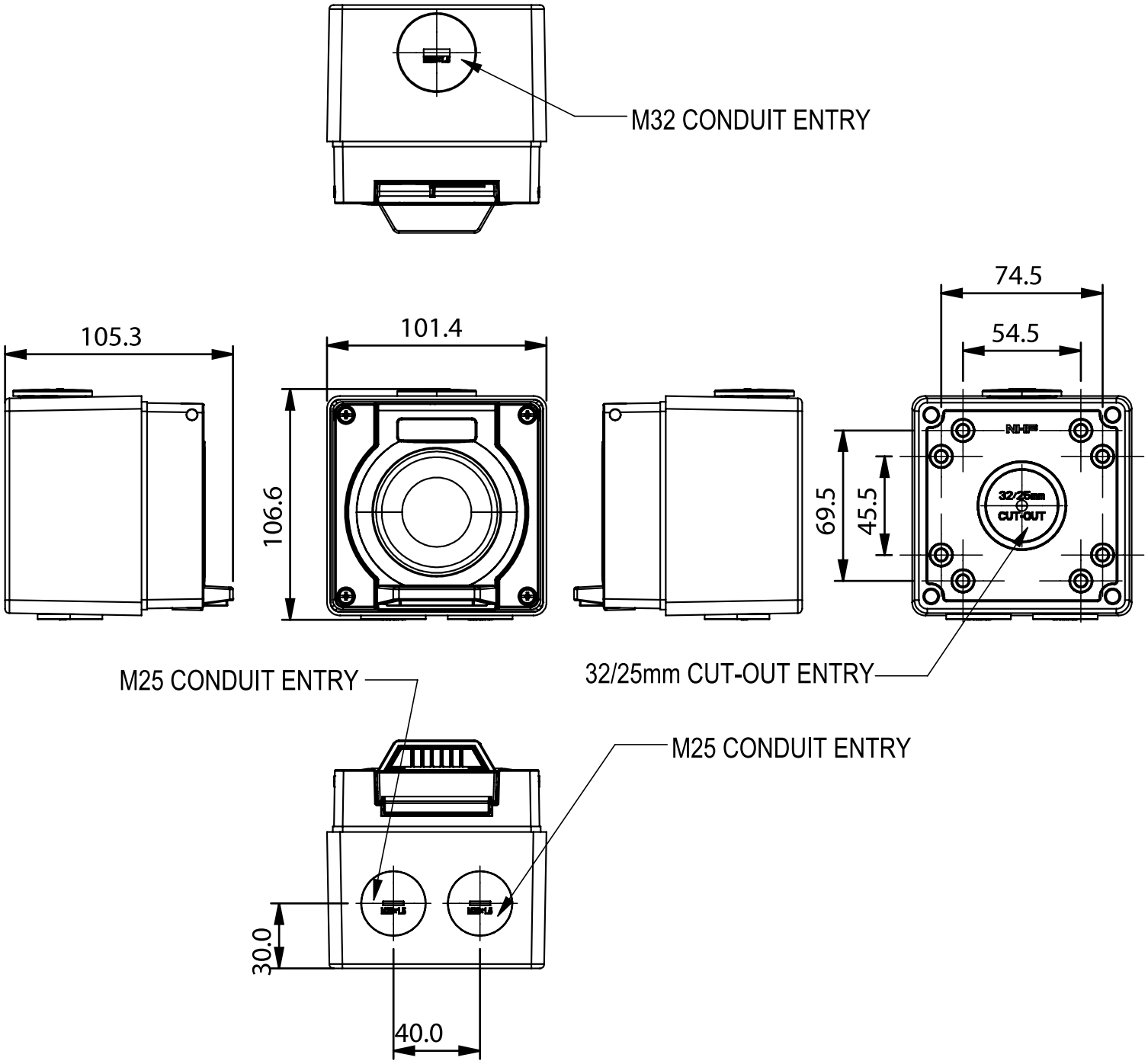

Published on 29 June 2026