ISOSO320FPRWLB

NHP ISO Socket Outlet, 3 Flat Pins 20A 250V AC, w/o Base, Resistant White

ISO
INDUSTRIAL PLUGS AND SOCKETS



Component type	Socket outlet according to AS/NZS 3112
Range	ISO
Model	N/A
Product status	Existing

The often overlooked essentials that are always indispensable. Choose from NHP's range of 400+ industrial, isolating and high-current plugs, sockets and switches available for a wide breadth of applications.

ELECTRICAL	Nominal voltage	250 V
	Rated current	20 A
CONSTRUCTION	Colour	Resistant white
	Protective earth pin round	No
	Number of active pins (flat)	3
	With base	No
	IP rating	IP66
	Resistant to chemicals	Yes
DIMENSIONS	Height	95 mm
	Width	101 mm
	Depth	42 mm

Published on 29 June 2026

ISOSO320FPRWLB

NHP ISO Socket Outlet, 3 Flat Pins 20A 250V AC, w/o Base, Resistant White

ISO
INDUSTRIAL PLUGS AND SOCKETS

DIMENSIONAL DIAGRAM

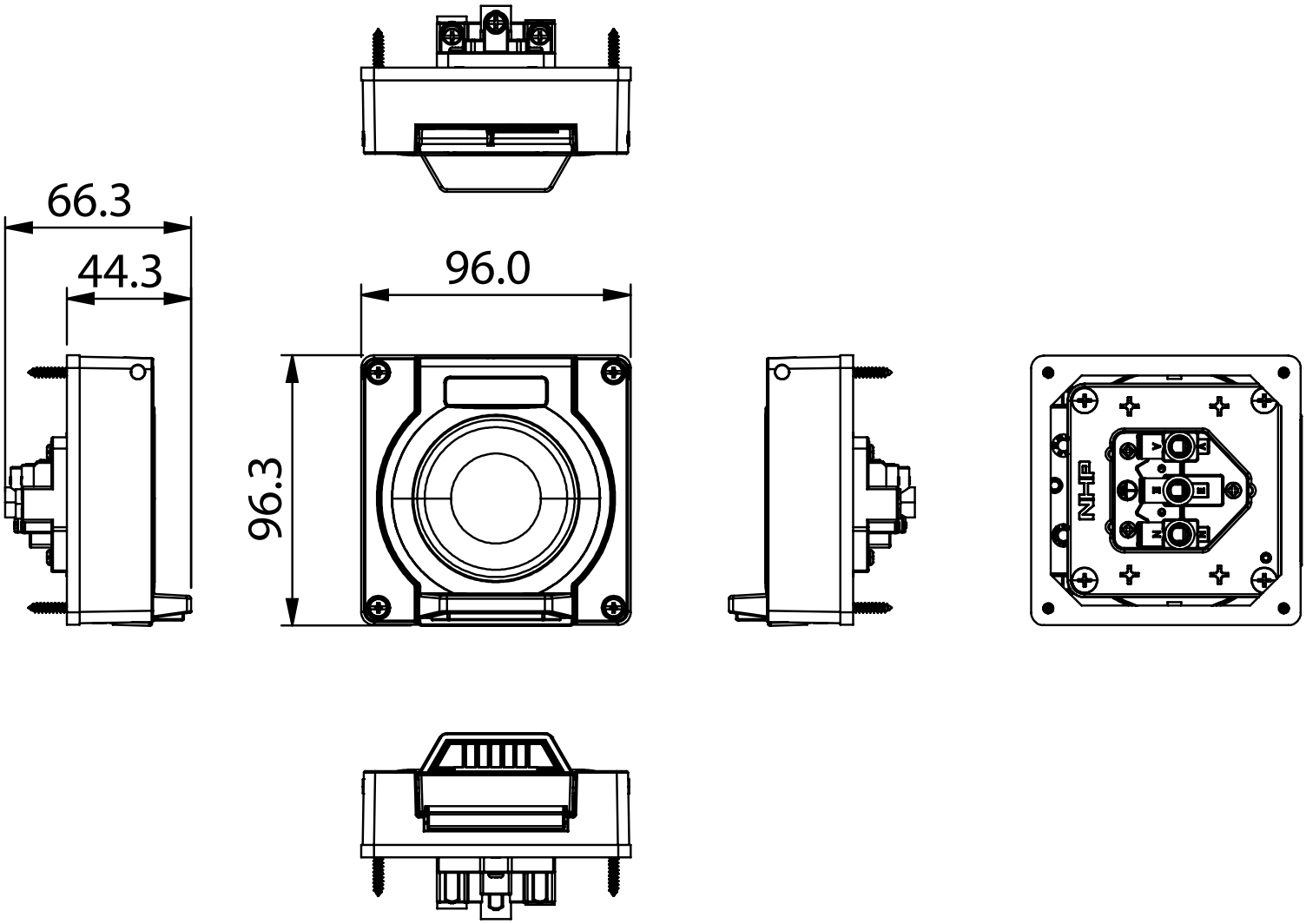

Published on 29 June 2026