ISO480SSYS

Socomec ISO Enclosed Isolator, IP 65 Stainless Steel, Handle - Red, 4P 80A

ENCLOSED ISOLATORS

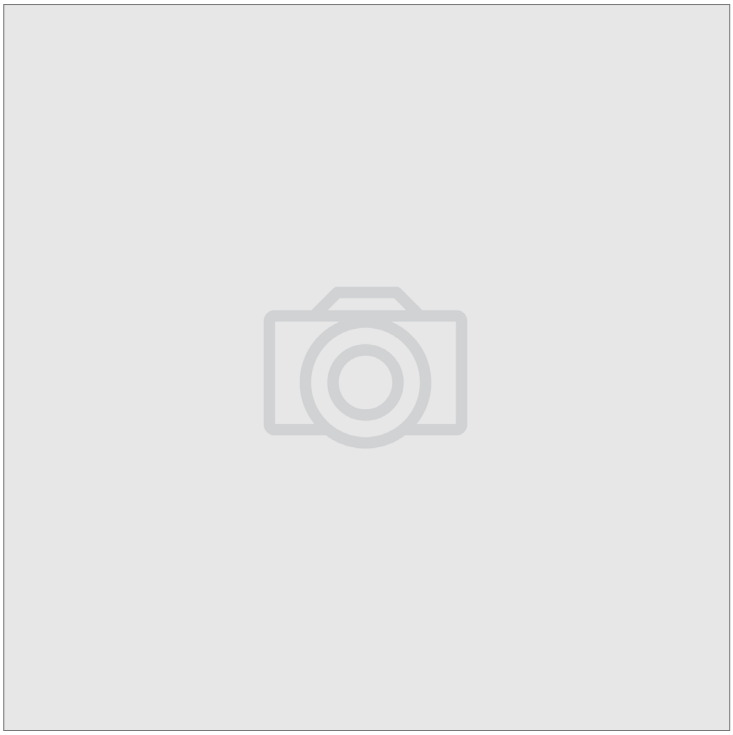

Component type	Switch disconnector
Range	ISO
Model	N/A
Product status	Existing

The Socomec ISO enclosed isolators deliver IP65, wall mountable, switching solutions ensuring coverage for any application. With a choice of plastic, aluminium and 316 stainless steel enclosures ranging from 25A to 250A, the range suits all environments. All handles allow for up to 3 padlocks in the OFF position and enclosure interlocking when in the ON position.

ELECTRICAL	Rated operating voltage Ue	400-690 V
	Rated uninterrupted current Iu	80 A
	Number of poles	4
	Frequency	50/60 Hz
	Rated operation current Ie at AC-23a, 690 V	80 A
	Rated short-time withstand current Icw	3 kA
	Rated impulse withstand voltage Uimp	6 kV
	Type of electrical connection of main circuit	Screw connection
	Rated operating voltage	690 V
	Number of auxiliary contacts as normally closed contact	0
	Number of auxiliary contacts as normally open contact	0
	Number of auxiliary contacts as change-over contact	0
	Motor drive integrated	No
CONSTRUCTION	Material housing	Plastic
	Colour control element	Red
	Degree of protection (IP), front side	IP65
	Degree of protection (NEMA)	4X
	Version as reversing switch	No
	Number of switches	1
	Interlockable	No
MECHANICAL	Padlock locking	Yes
DIMENSIONS	Height	159 mm
	Width	150 mm

Published on 02 November 2026

ISO480SSYS

Socomec ISO Enclosed Isolator, IP 65 Stainless Steel, Handle - Red, 4P 80A

ENCLOSED ISOLATORS

DIMENSIONS	**Depth**	120 mm
	Connectable conductor cross section	1.5-35 mm²

DIMENSIONAL DIAGRAM

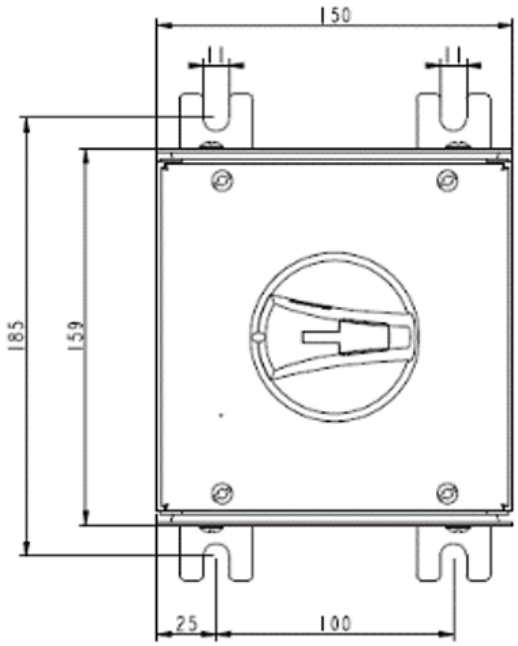

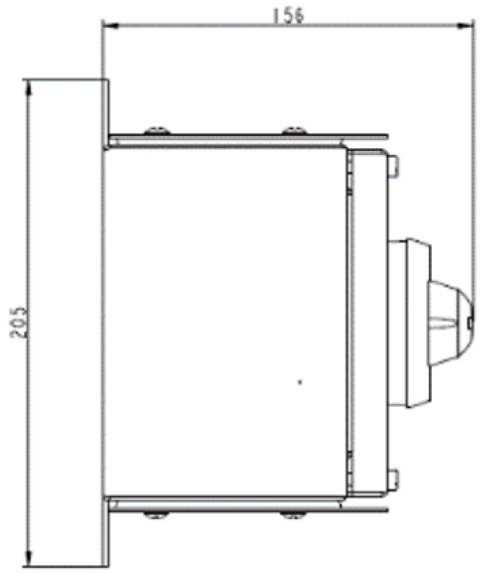

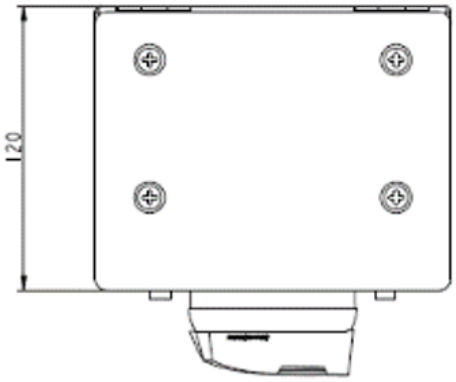

Published on 02 November 2026