EEX14RWA0IS

Steute HAE Operator Ex 1,2,21,22 Switch Panelmount 2 Position 0 I 1NO 1NC 1m

LIMIT SWITCHES

.steute



Component type	Selector switch, complete
Range	HAE Limit Switch
Model	N/A
Product status	Existing

Steute Technologies offer a wide range of explosion-proof HAE position limit switches for industrial applications, with optional safety functions. Explosion-proof limit switches are offered with thermoplastic or metal enclosures with slow or snap action. Ideal for use in areas with hazardous gas, vapours, mists, hazardous powder, dust or in extreme cold (down to -60°C).

ELECTRICAL	Type of control element	Short thumb-grip
	Number of contacts as normally open contact	1
	Number of contacts as normally closed contact	1
CONSTRUCTION	IP rating	IP65
MECHANICAL	Number of switch positions	2
	Switching function latching	No
	Spring-return	No
PHOTOMETRIC	Suitable for illumination	No
DIMENSIONS	Hole diameter	22.5 mm
ENVIRONMENT	Operating temperature	-20…95 °C

Published on 21 May 2026

EEX14RWA0IS

Steute HAE Operator Ex 1,2,21,22 Switch Panelmount 2 Position 0 I 1NO 1NC 1m

LIMIT SWITCHES

.steute

DIMENSIONAL DIAGRAM

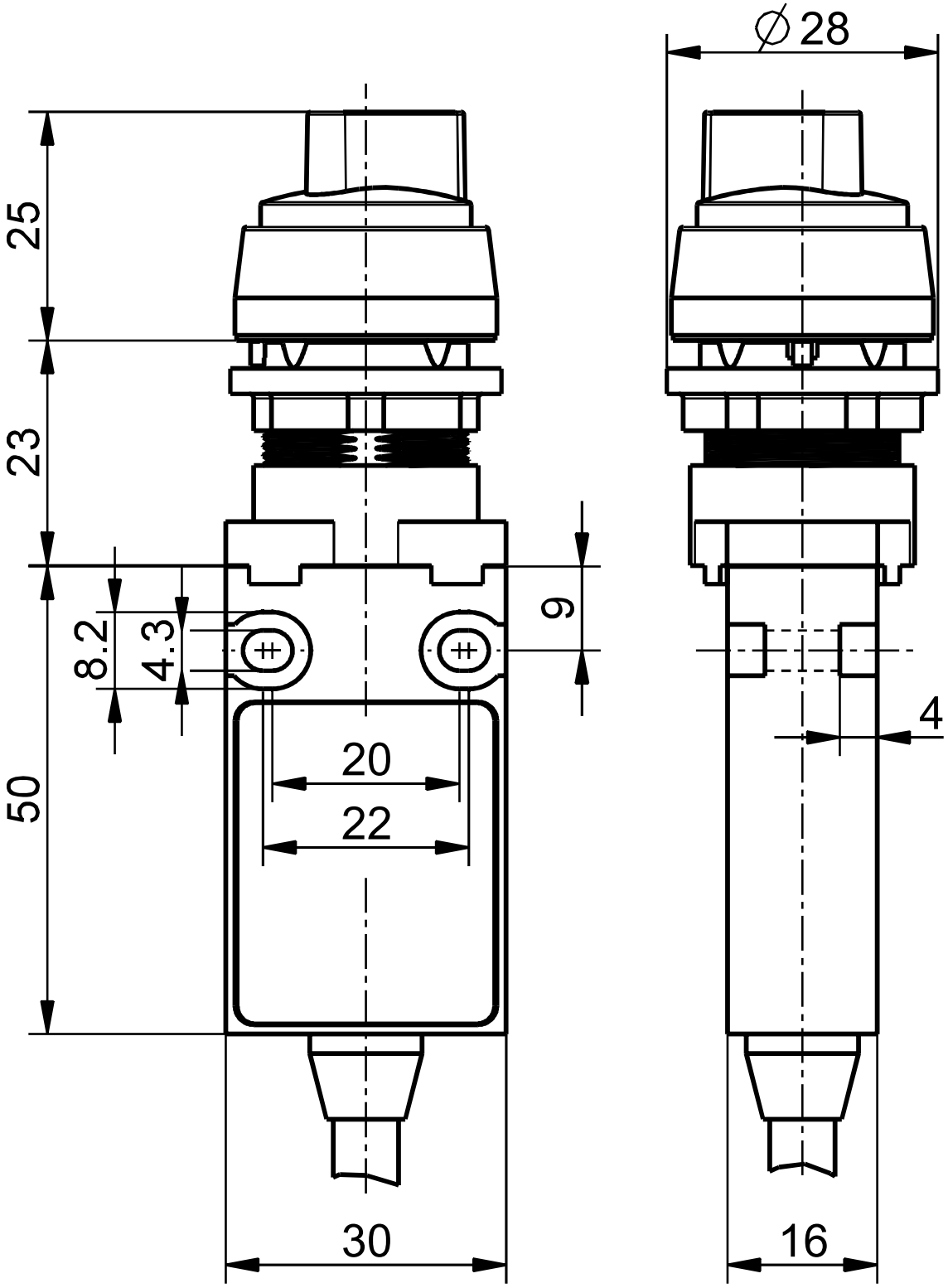

Published on 21 May 2026