EEX14DS1O1S5M

Steute HAE Limit Switch Ex 1,2,21,22 Safety 30mm Plastic Adjust Roller Lever 1NO 1NC Slow 5m

LIMIT SWITCHES

.steute

Component type	Limit switch
Range	HAE Limit Switch
Model	N/A
Product status	Existing

Steute Technologies offer a wide range of explosion-proof HAE position limit switches for industrial applications, with optional safety functions. Explosion-proof limit switches are offered with thermoplastic or metal enclosures with slow or snap action. Ideal for use in areas with hazardous gas, vapours, mists, hazardous powder, dust or in extreme cold (down to -60°C).

ELECTRICAL	**Type of electric connection**	With cable preassembled
	Rated operation current Ie at AC-15, 230 V	0 A
	Rated operation current Ie at DC-13, 230 V	0.25 A
CONSTRUCTION	**Material housing**	Plastic
	IP rating	IP67
MECHANICAL	**Switching function**	Quick-break switch
DIMENSIONS	**Cable length**	5 m
	Width sensor	30 mm

Published on 09 June 2026

EEX14DS1O1S5M

Steute HAE Limit Switch Ex 1,2,21,22 Safety 30mm Plastic Adjust Roller Lever 1NO 1NC Slow 5m

LIMIT SWITCHES

.steute

DIMENSIONAL DIAGRAM

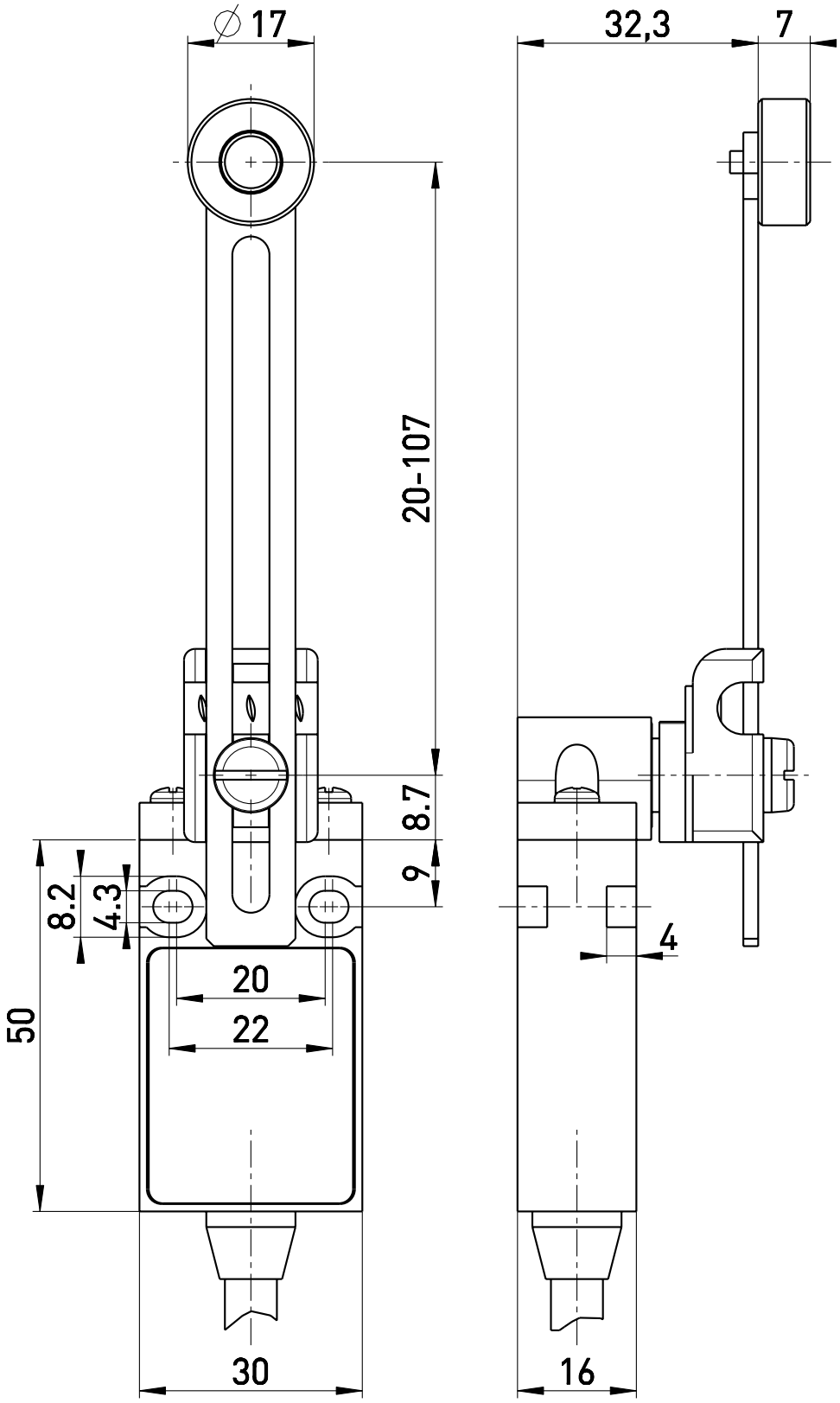

Published on 09 June 2026