D7PLG5

Sprecher and Schuh D7 PushButton 22.5 mm Plastic Momentary Illuminated Guarded Head Yellow

PUSHBUTTON AND PILOT LIGHTS

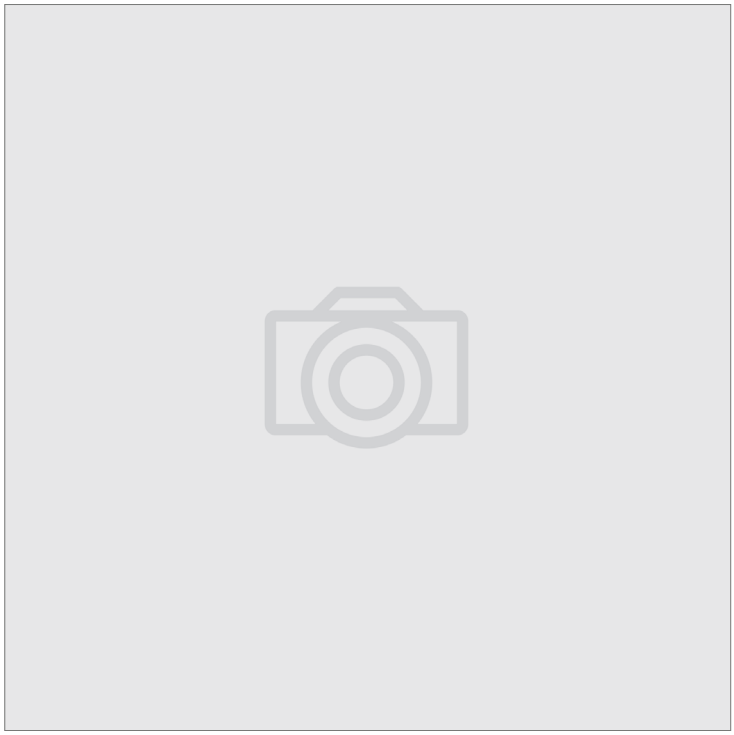

Component type	Front element for push button
Range	D7
Model	N/A
Product status	Existing

The Sprecher + Schuh D7 line of operator control devices is a diverse range of 22.5mm mount pushbuttons, pilot lights, selector switches, and emergency stops, ideal for use in applications requiring reliable performance. Modular design allows for easy configuration and assembly. Available in plastic and metal types, optional accessories include enclosures, legend plates, padlocks, and colour caps.

Published on 11 November 2026

D7PLG5

Sprecher and Schuh D7 PushButton 22.5 mm Plastic Momentary Illuminated Guarded Head Yellow

PUSHBUTTON AND PILOT LIGHTS

DIMENSIONAL DIAGRAM

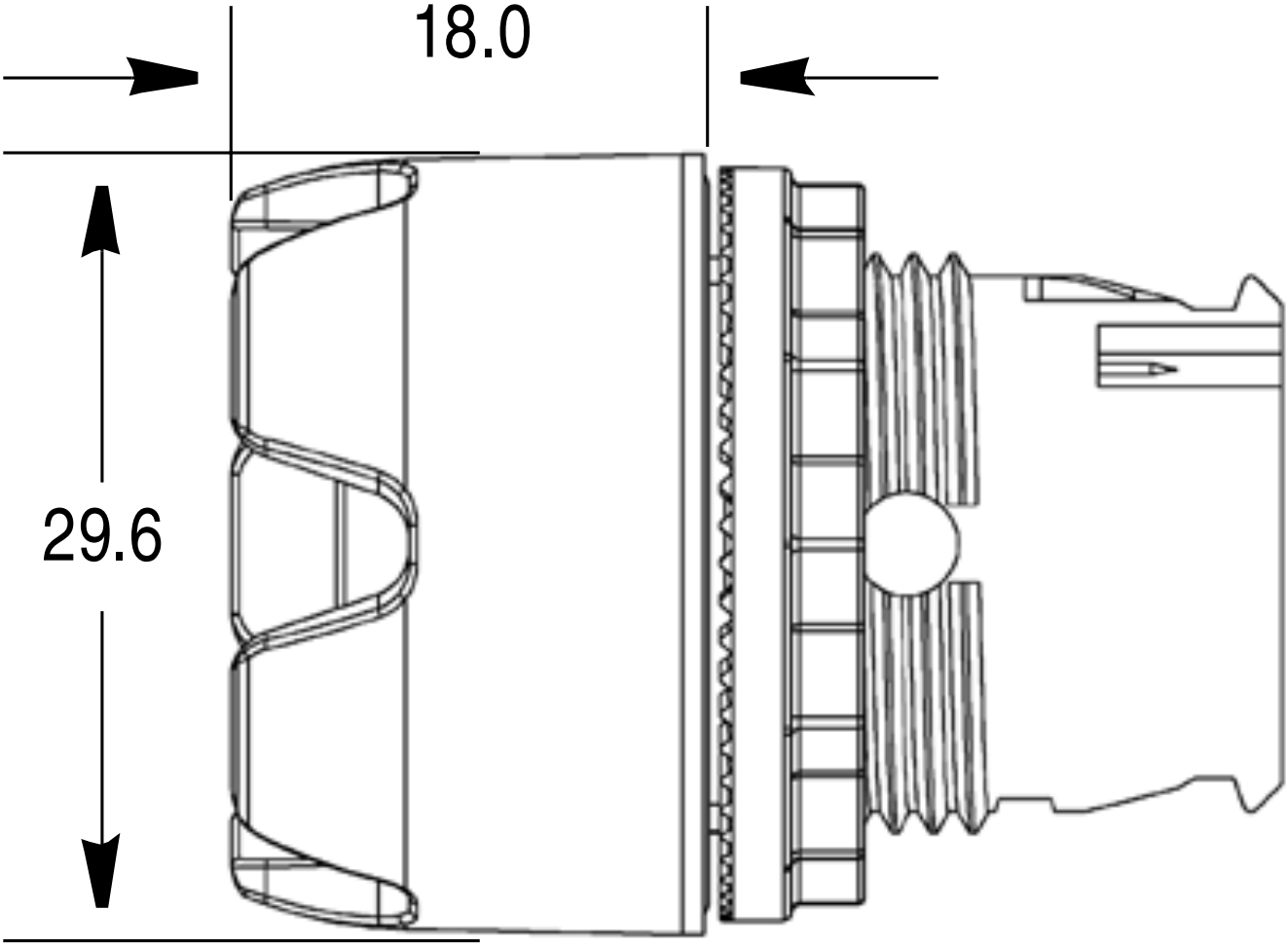

Dimensions are in millimeters.

Published on 11 November 2026