CPL72M250O

NHP Concept Plus Panelboard 1296mm IP42 DIN-T 72 Way 250A NC Chassis 250A Main Switch Orange



Component type	Small distribution board
Range	Concept Plus
Model	N/A
Product status	Existing

The Concept Plus Panelboard is a multipurpose panelboard for general purpose applications, offering a large range of features and options. Concept Plus offers an IP42 rating with optional IP52.

ELECTRICAL	Rated current In	250 A
	Number of outgoing ways	72
	Number of poles, 18mm pitch	72
	Max. rated operation voltage Ue AC	415 V
	Rated impulse withstand voltage Uimp	6 kV
	Rated insulation voltage Ui	500 V
	Number of poles main switch	3
	Main switch rated current	250 A
	Neutral terminal block	Yes
	Neutral bar rated current	250 A
	Earthing terminal block	Yes
CONSTRUCTION	Spare DIN equipment space (poles)	18
	DIN-rail	Yes
	Material housing	Steel
	Material thickness	1.6 mm
	Colour	Orange
	IP rating	IP42
	Type of cover	Door
	Material thickness cover	1.6 mm
	Transparent cover/door	No
	With lock	Yes
	Mounting method	Surface mounted (plaster)
MECHANICAL	Impact strength	IK10
DIMENSIONS	Height	1296 mm
	Width	600 mm
	Depth	200 mm

Published on 12 October 2026

CPL72M250O

NHP Concept Plus Panelboard 1296mm IP42 DIN-T 72 Way 250A NC Chassis 250A Main Switch Orange

DIMENSIONAL DIAGRAM

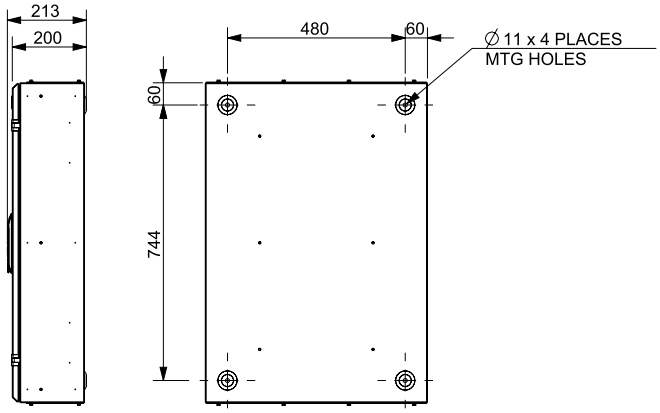

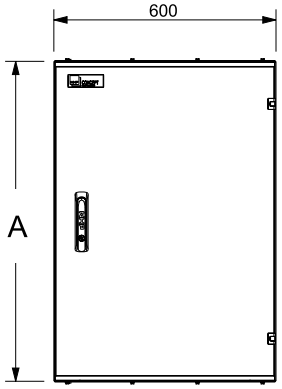

Module Size	A	B
2	432mm	312mm
3	648mm	528mm
4	864mm	744mm
5	1080mm	960mm
6	1296mm	1176mm
7	1512mm	1392mm
8	1728mm	1608mm
9	1944mm	1824mm

Plan view

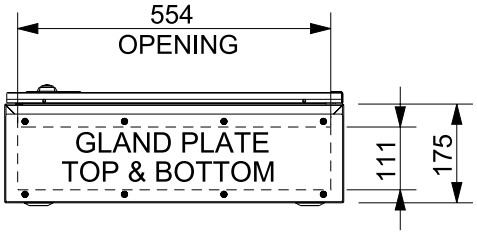

RELATED PRODUCTS

ACCESSORY



Item No: CELABGBBK

Required: No

Description: NHP Panelboard Accessory Wall Mounting Brackets Black suit Enclosure 600mm width



Item No: CELACMSA4

Required: No

Description: NHP Panelboard Accessory Door Schedule Card Holder 7mm Pocket A4 White



Item No: CELAELK1W

Required: No

Description: NHP Panelboard Accessory Emergency Lighting Test Unit Push Button Open Type



Item No: CELAELK2W

Required: No

Description: NHP Panelboard Accessory Emergency Lighting Test Unit Key Switch Open Type



Item No: CELAFK6OR

Required: No

Description: NHP Concept Plus and Premier Panelboard Accessory Flush Kit 1296mm Orange

Item No: CELAGMS05

Required: No

Description: NHP Panelboard Accessory Gear Tray 108mm White suit Enclosure Width 600mm

Published on 12 October 2026

CPL72M250O

NHP Concept Plus Panelboard 1296mm IP42 DIN-T 72 Way 250A NC Chassis 250A Main Switch Orange

RELATED PRODUCTS

ACCESSORY

Item No: CELAGMS1
Required: No
Description: NHP Panelboard Accessory Gear Tray 216mm White suit Enclosure Width 600mm

Item No: CELAGMS2
Required: No
Description: NHP Panelboard Accessory Gear Tray 432mm White suit Enclosure Width 600mm

Item No: CELAGMS3
Required: No
Description: NHP Panelboard Accessory Gear Tray 648mm White suit Enclosure Width 600mm

Item No: CELAKDHR
Required: No
Description: NHP Panelboard Accessory Door Hinge kit



Item No: CELASSED1
Required: No
Description: NHP Panelboard Accessory Safety Service Enclosure Mounting Kit 1 Pole



Item No: CELASSED2
Required: No
Description: NHP Panelboard Accessory Safety Service Enclosure Mounting Kit 2 Pole



Item No: CELASSED3
Required: No
Description: NHP Panelboard Accessory Safety Service Enclosure Mounting Kit 3 Pole

Item No: CELDLR6MS
Required: No
Description: NHP Panelboard Accessory Door Locking Rods Size 6 Modules



Item No: CELHCRP21A60
Required: No
Description: NHP Panelboard Accessory Locking Roller Cam 1 Point 22mm



Item No: CELHCRP21C60
Required: No
Description: NHP Panelboard Accessory Door Handle Cam Roller Three Point



Item No: CELHDSPBE
Required: No
Description: NHP Panelboard Accessory Door Swing Handle E Key



Item No: CELHDSPPP
Required: No
Description: NHP Panelboard Accessory Door Swing Handle Pad Lockable 10mm



Item No: CELHDSPS9
Required: No
Description: NHP Panelboard Accessory Door Swing Handle 92268



Item No: CELHDSPSC
Required: No
Description: NHP Panelboard Accessory Door Swing Handle CI001

Item No: CELHDSZNKIT
Required: No
Description: NHP Panelboard Accessory Door Swing Handle IP66 Non Lockable

Item No: CELHDSZQ7KIT
Required: No
Description: NHP Panelboard Accessory Door Swing Handle 7mm Square



Item No: CELSURGEK1
Required: No
Description: NHP Concept Panelboard Accessory Surge Type 2 Loom Labels Kit 40kA



Item No: CPLAPDGAL
Required: No
Description: NHP Panelboard Plinth Kit Double 75mm Hot Dip Galvanised suit Enclosure 600x200mm

CPL72M250O

NHP Concept Plus Panelboard 1296mm IP42 DIN-T 72 Way 250A NC Chassis 250A Main Switch Orange

RELATED PRODUCTS

ACCESSORY



Item No: CPLAPSGAL
Required: No
Description: NHP Panelboard Plinth Kit Single 75mm Hot Dip Galvanised suit Enclosure 600x200mm



Item No: CPLAPTGAL
Required: No
Description: NHP Panelboard Plinth Kit Triple 75mm Hot Dip Galvanised suit Enclosure 600x200mm



Item No: CPLEGGF
Required: No
Description: NHP Panelboard Gland Plate Gasket Foam suit Enclosure 600x200mm



Item No: CPLEGPAL3
Required: No
Description: NHP Panelboard Gland Plate 3mm Aluminium suit Enclosure 600x200mm



Item No: CPLEGPBK5
Required: No
Description: NHP Panelboard Gland Plate 5mm Bakelite suit Enclosure 600x200mm



Item No: CPLEGPBR3
Required: No
Description: NHP Panelboard Gland Plate 3mm Brass suit Enclosure 600x200mm



Item No: CPLEGPMS1OR
Required: No
Description: NHP Panelboard Gland Plate 1.6mm Steel Orange suit Enclosure 600x200mm

Item No: CPLEIP52M6
Required: No
Description: NHP Concept Plus Panelboard Retro Fit Kit IP52 1296mm



Item No: DA28400
Required: No
Description: STEGO Pressure Compensation Device Plastic M40 IP66 and X9K Qty 2



Item No: DA28404000
Required: No
Description: STEGO Pressure Compensation Device Aluminium M12 IP67 Qty 1



Item No: DA28406
Required: No
Description: STEGO Pressure Compensation Device Plastic M12 IP66 and X9K Qty 2



Item No: DA28420000
Required: No
Description: STEGO Pressure Compensation Device Plastic M40 IP66 Qty 1



Item No: DA28455
Required: No
Description: STEGO Pressure Compensation Device 303 Stainless M40 IP66 and X9K



Item No: DD084
Required: No
Description: STEGO Drainage Device Plastic IP66 and IP67 and IP69K M50



Item No: LABLEG4996D
Required: No
Description: NHP Panelboard Accessory Escutcheon Label 49 to 96 suits DINT