AFR02R5

nVent HOFFMAN MAS/MAD Gland Plate Vented Size 2 W310 x H96mm Opening Steel 1.4mm

WALL MOUNT ENCLOSURES

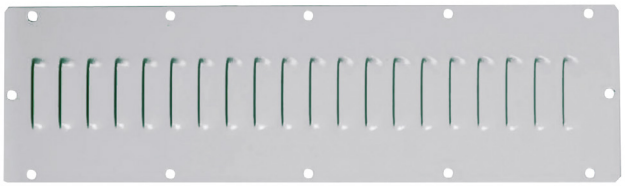

Component type	Ventilation plate (enclosure/cabinet)
Range	MAS/MAD
Model	N/A
Product status	Existing

Enclosure accessories include wall-mount brackets, depth adjustment kits and lock options, as well as climate control and lighting. This allows fast and easy enclosure customisation to suit specific customer and installation requirements.

CONSTRUCTION	**Colour**	Grey
	Material	Steel
	Surface finishing	Lacquered
	IP rating	IP23
	For max. number of fans	0
	With built-in filter	No
	Mounting method	Screw mounting
MECHANICAL	**Suitable for enclosure building depth**	96 mm
DIMENSIONS	**Width**	310 mm
	Height	96 mm

Published on 13 November 2026

AFR02R5

nVent HOFFMAN MAS/MAD Gland Plate Vented Size 2 W310 x H96mm Opening Steel 1.4mm

WALL MOUNT ENCLOSURES

DIMENSIONAL DIAGRAM

Front view

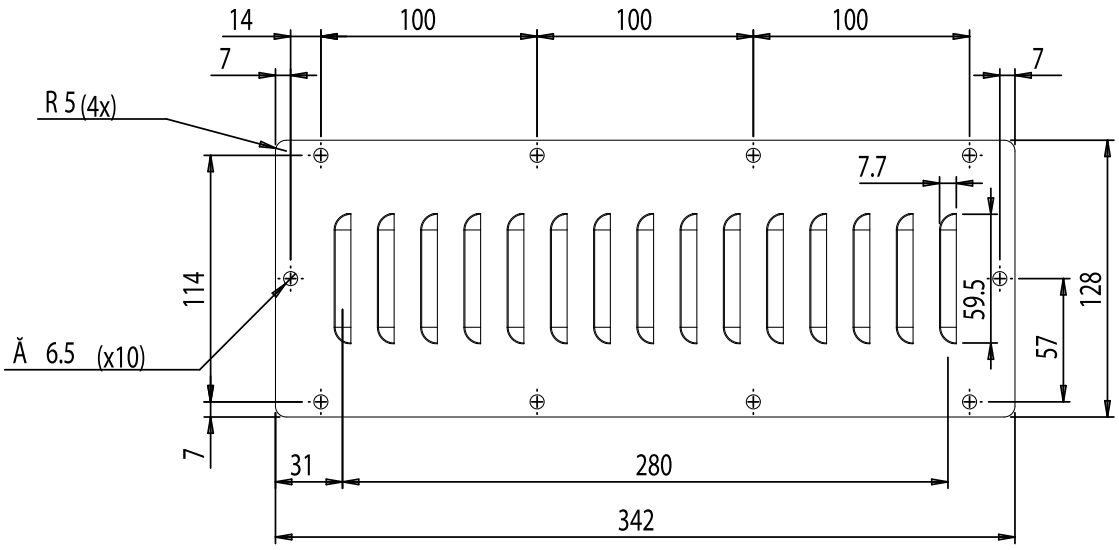

Side view

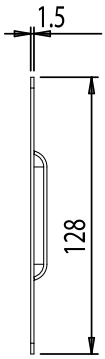

Published on 13 November 2026