800FPLFA7

Allen-Bradley 800F Pushbutton 22.5mm Head Only PLT Alternate Action Flush Clear Cap Illuminated

PUSHBUTTON AND PILOT LIGHTS

Component type	Front element for push button
Range	800F Pushbutton
Model	N/A
Product status	Existing

The Allen-Bradley 800F line of operator control devices are a range of 22.5mm mount pushbuttons, pilot lights, selector switches, emergency stops for use in industrial applications requiring reliable performance. Available in plastic or metal types with a wide range of accessories including enclosures, legend plates, padlocks and colour caps making them suitable for use in various applications.

CONSTRUCTION	Colour button	Clear
	Type of button	Flat
	Labelled	No
	Material front ring	Plastic
	Colour front ring	Black
	Degree of protection (IP), front side	IP66
	Construction type lens	Round
	With protective cover	No
	With front ring	Yes
	Degree of protection (NEMA), front side	5
MECHANICAL	Switching function latching	No
	Spring-return	No
	Max. vibration acceleration	10 m/s²
	Max. vibration frequency, operational	2000 Hz
	Max. shock acceleration	100 g
	Number of command positions	1
PHOTOMETRIC	Suitable for illumination	Yes
DIMENSIONS	Hole diameter	22.5 mm
	Width opening	29.6 mm

DIMENSIONAL DIAGRAM

Non-Illuminated Guarded, Illuminated and Non-Illuminated Alternate Action Push Button Operators

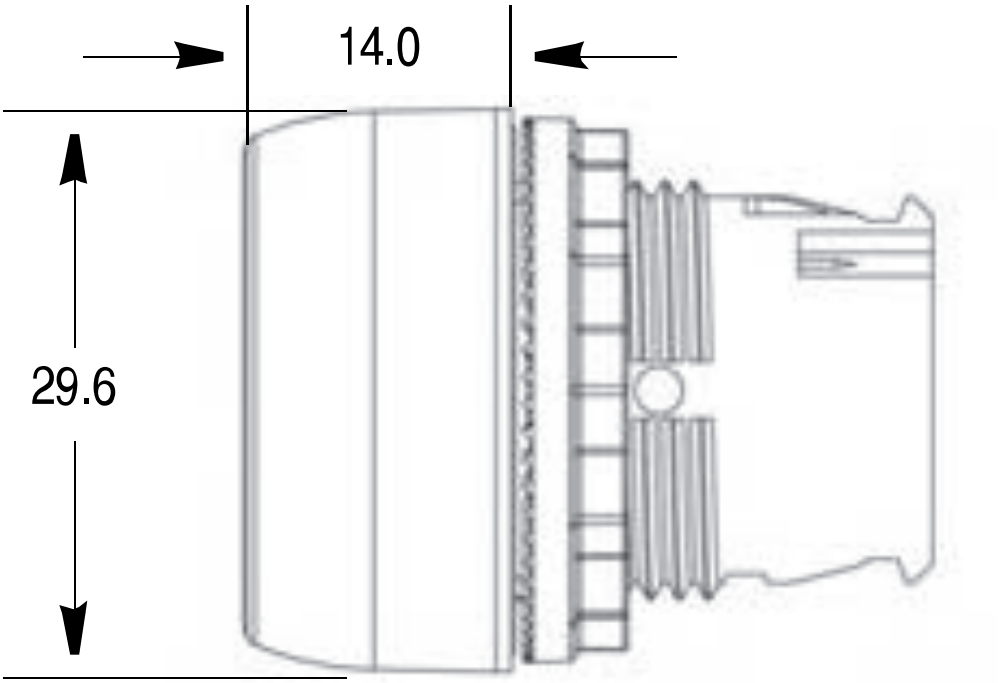

RELATED PRODUCTS

ACCESSORY

Item No: 800FA6PR5
Required: No
Description: Allen-Bradley 800F Plastic Guard Yellow Round for E-stop Operators

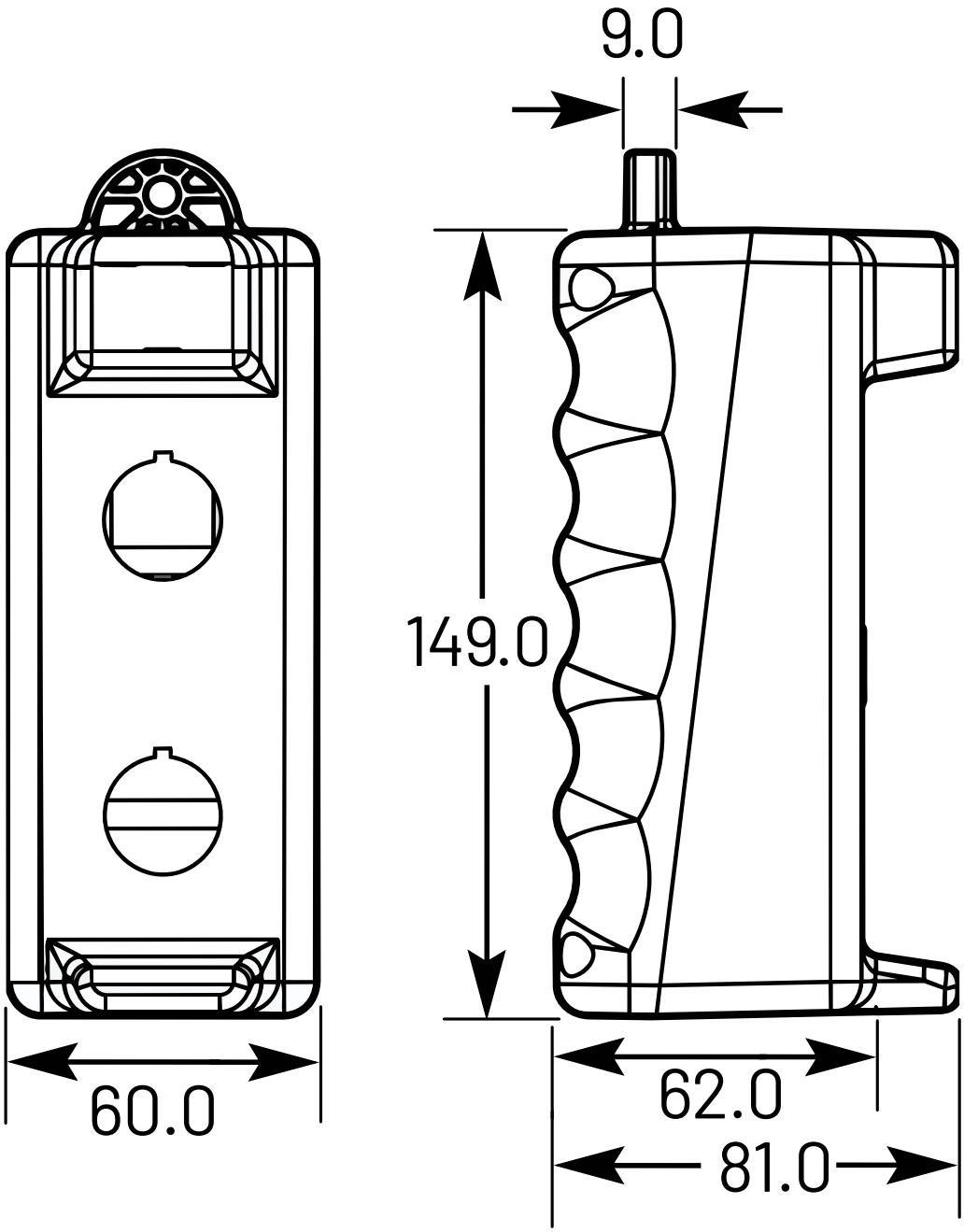

Dimensions are in millimeters.