6531M240VAC

Finder 65 Series Power Relay Flange Mount 30A 240V AC Coil 1NO Contacts

GENERAL PURPOSE RELAYS



Component type	Switching relay
Range	Panel Mount and Power Relay
Model	N/A
Product status	Discontinued

The Finder General Purpose Panel Mount and Power Relays are a reliable and efficient switching solution for various applications and industries. Options include coil voltages, output current ratings, contact configurations. A modular design allows for surge suppressors, coil indication and timers. Features manual override, push-to-test, slots for markers, jumpers and gold-plated contacts.

ELECTRICAL	Nominal current	30 A
	Nominal voltage AC	250 V
	Max. rated operation voltage Ue AC	400 V
	Number of contacts as normally open contact	1
	Drive, switching attitude	Mono stable
	Rated switching power at AC-1	7500 VA
	Rated switching power at AC-15, 230V	1250 VA
	Breaking capacity at DC-1, 30V	30 A
	Breaking capacity at DC-1, 110V	1.1 A
	Voltage type for actuating	AC
	Control supply voltage Us at AC 50HZ	240 V
	Control supply voltage Us at AC 60HZ	240 V
	Type of electric connection	Soldering flag connection
	Electrical life at Un, In (service cycles)	80000 cycles
	Drive, polarization	Polarity free
	Type of switch contact	Double contact
	Material of contact insert	Duroplast
	Operating voltage	192-264 V
CONSTRUCTION	Material contact	Silver cadmium-oxide
	Suitable for flange mounting	Yes
MECHANICAL	Mechanical life (service cycles)	1.0E7 cycles
	Max. shock acceleration	20 g
	Max. shock duration	6 ms
	Max. vibration acceleration	20 m/s²
	Max. vibration frequency, operational	150 Hz
DIMENSIONS	Width	32.2 mm

Published on 21 September 2026

6531M240VAC

Finder 65 Series Power Relay Flange Mount 30A 240V AC Coil 1NO Contacts

GENERAL PURPOSE RELAYS

DIMENSIONS	Height	36.5 mm
	Depth	57.2 mm
ENVIRONMENT	Operating temperature	-40…75 °C

DIMENSIONAL DIAGRAM

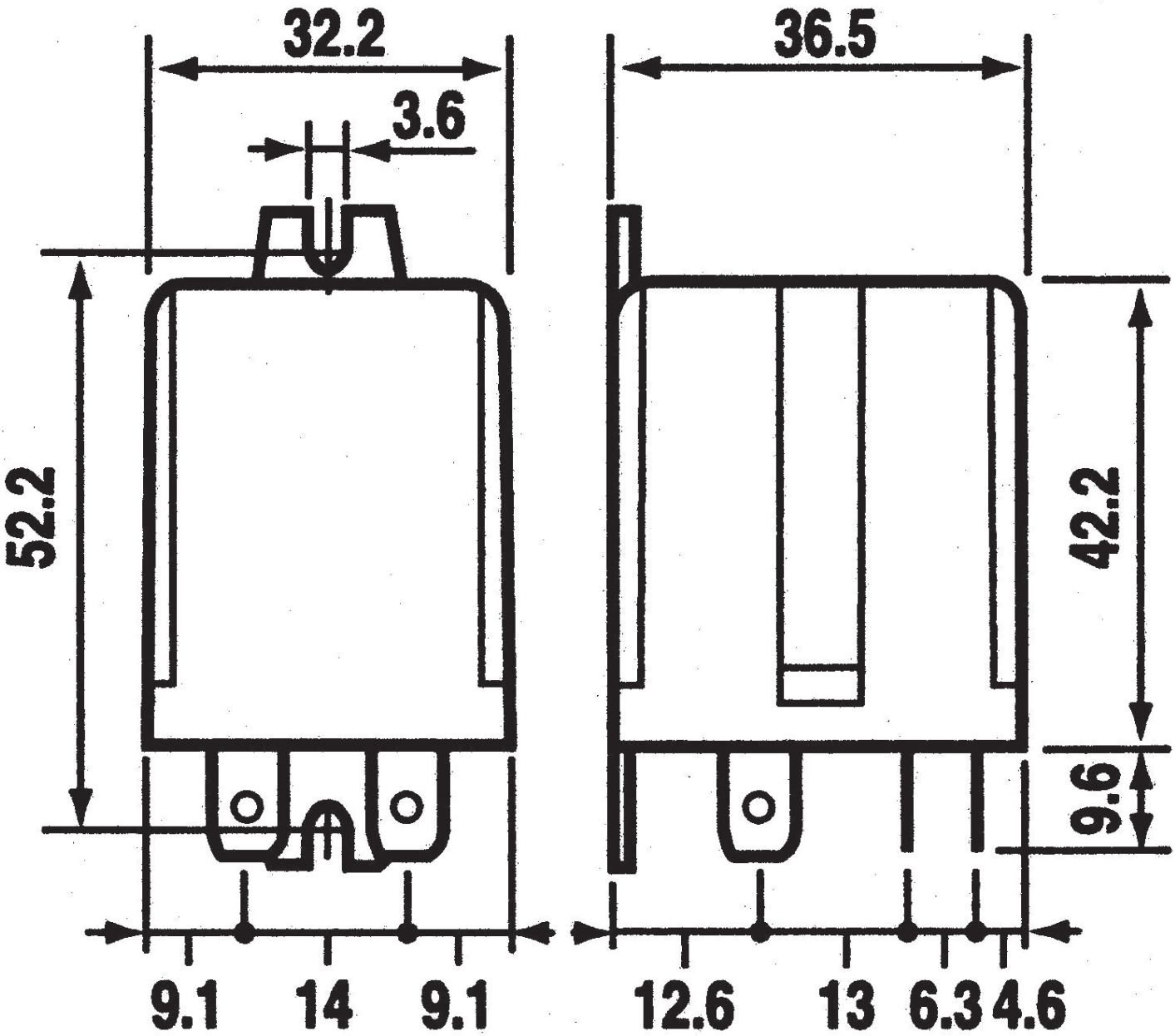

Published on 21 September 2026