5094OF8IH

Allen-Bradley FLEX 5000 I/O Analogue 8 Output Isolated HART Module

IN CABINET DISTRIBUTED IO



Component type	Fieldbus, decentr. periphery - analogue/digital I/O module
Range	FLEX I/O
Model	N/A
Product status	Existing

The Allen-Bradley FLEX™ I/O system offers a flexible, modular, and cost-effective solution for your industrial automation and control. The space saving design offers rack-based I/O functionality of up to eight modules and provides digital, analogue, HART analogue, and specialty I/O with 4...32 points per module with flexible mounting and wiring options.

ELECTRICAL	Analogue output, voltage	Yes
	Resolution of the analogue outputs	16 Bit
	Analogue output signal configurable	Yes
	Analogue outputs configurable	Yes
	Analogue output, current	Yes
CONSTRUCTION	Suitable for safety functions	No
	Number of analogue outputs	8
DIMENSIONS	Width	94 mm
	Height	54 mm
	Depth	87 mm
ENVIRONMENT	Operating temperature	-40…70 °C
	Storage temperature	-40…85 °C
	Max. ambient humidity (non-condensing)	95 %

Published on 14 September 2026

5094OF8IH

Allen-Bradley FLEX 5000 I/O Analogue 8 Output Isolated HART Module

IN CABINET DISTRIBUTED IO

DIMENSIONAL DIAGRAM

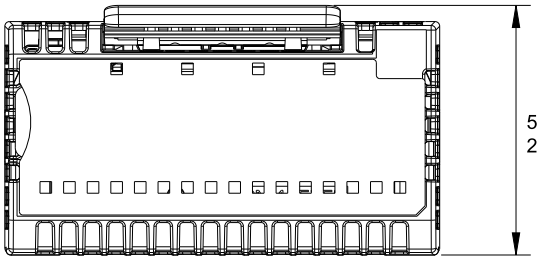

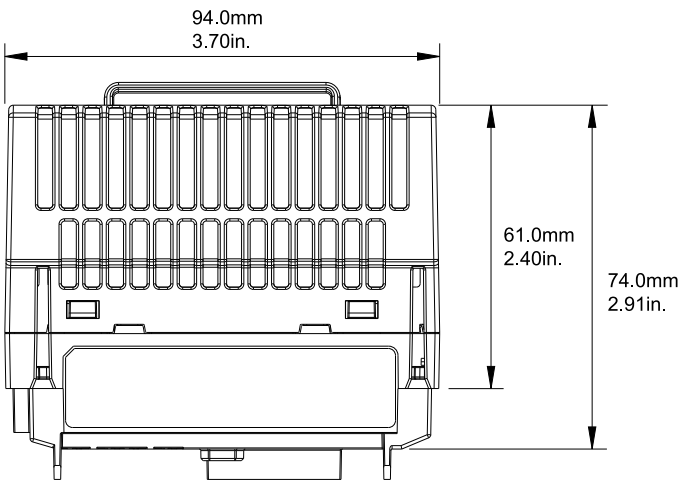

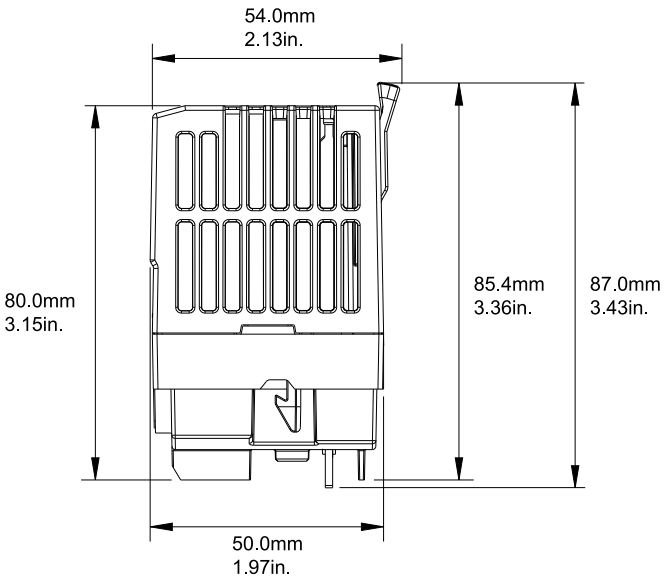

Published on 14 September 2026