2080LC1012QBB

Allen-Bradley Micro810 Controller 8DI/4AI Configurable 4DO Source 12/24VDC

MICRO CONTROL SYSTEMS

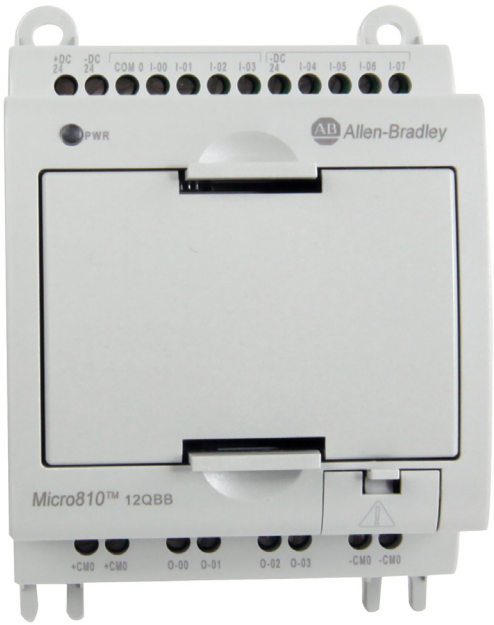

Component type	PLC CPU-module
Range	Micro 800
Model	810
Product status	Existing

Allen-Bradley Micro800 controllers offer both a scalable and robust micro control solution for small to large standalone applications and allow for customisation and flexibility. You can elect from a wide range of plug-in modules to match your requirements and make use of Connected Components Workbench™ software to help reduce machine design time and maximise productivity.

ELECTRICAL	Voltage type of supply voltage	DC
	With optical interface	No
	Redundancy	No
COMMUNICATION	Max. number of EtherNet/IP nodes	20
	Can be programmed with Connected Components Workbench	Yes
	Can be programmed with Studio 5000 Logix Designer	No
	Can be programmed with RSLogix 500	No
	Supporting protocol for TCP/IP	No
	Supporting protocol for PROFIBUS	No
	Supporting protocol for CAN	No
	Supporting protocol for INTERBUS	No
	Supporting protocol for ASI	No
	Supporting protocol for KNX	No
	Supporting protocol for Modbus	No
	Supporting protocol for Data-Highway	No
	Supporting protocol for DeviceNet	No
	Supporting protocol for SUCONET	No
	Supporting protocol for LON	No
	Supporting protocol for PROFINET IO	No
	Supporting protocol for PROFINET CBA	No
	Supporting protocol for SERCOS	No
	Supporting protocol for Foundation Fieldbus	No
	Supporting protocol for EtherNet/IP	No
	Supporting protocol for AS-Interface Safety at Work	No

Published on 06 November 2026

2080LC1012QBB

Allen-Bradley Micro810 Controller 8DI/4AI Configurable 4DO Source 12/24VDC

MICRO CONTROL SYSTEMS

Allen-Bradley

COMMUNICATION	Supporting protocol for DeviceNet Safety	No
	Supporting protocol for INTERBUS-Safety	No
	Supporting protocol for PROFIsafe	No
	Supporting protocol for SafetyBUS p	Yes
	Supporting protocol for other bus systems	No
	IO link master	Yes
CONSTRUCTION	Number of relay outputs	4
	Number of analogue inputs	4
	Number of digital inputs	4
	Number of digital outputs	4
	Memory size	2 MB
	Additional program memory possible	Yes
	Suitable for safety functions	No
	Model	Compact
	System accessory	No
	With display	Yes
	Rail mounting possible	Yes
	Wall mounting/direct mounting	Yes
	Front built-in possible	Yes
	Rack-assembly possible	No
DIMENSIONS	Width	75 mm
	Height	91 mm
	Depth	59 mm

Published on 06 November 2026

DIMENSIONAL DIAGRAM

Mounting Dimensions

Mounting dimensions do not include mounting feet or DIN rail latches.

Micro810 Controllers
2080-LC10-12AWA, 2080-LC10-12QWB, 2080-LC10-12QBB, 2080-LC10-12DWD

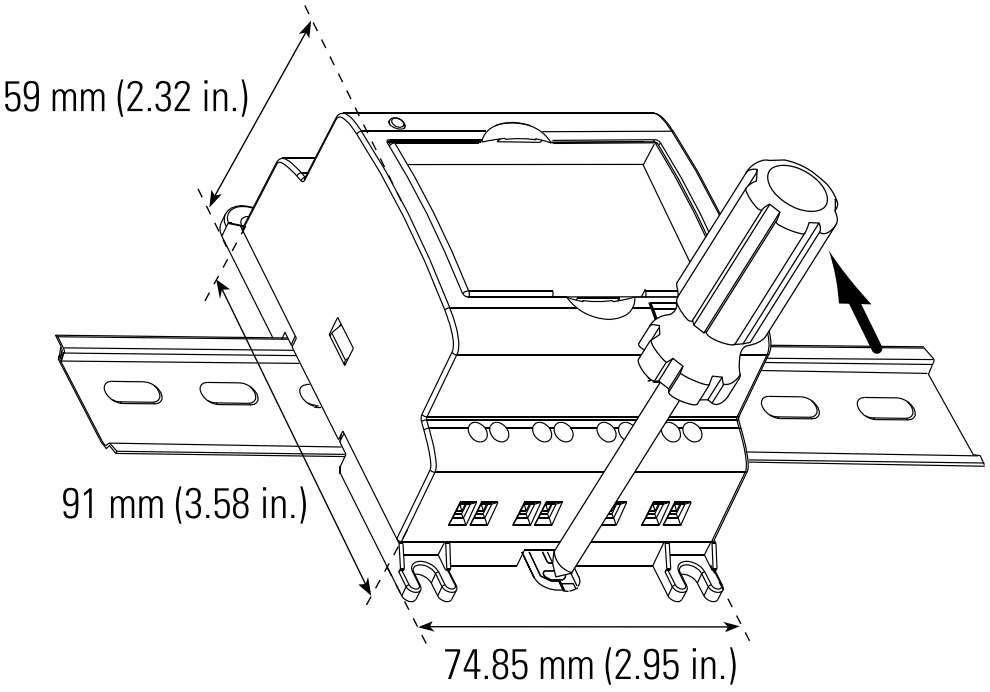

45054

RELATED PRODUCTS

ACCESSORY



Item No: 2080LCD
Required: No
Description: Allen-Bradley Micro810 Plug-in LCD 1.5 Inch Display Keypad



Item No: 2080PS120240VAC
Required: No
Description: Allen-Bradley Micro800 Power Supply 110-240VAC to 24VDC 1.6A

2080LC1012QBB

Allen-Bradley Micro810 Controller 8DI/4AI Configurable 4DO Source 12/24VDC

MICRO CONTROL SYSTEMS

RELATED PRODUCTS

ACCESSORY



Item No: 2080USBADAPTER

Required: No

Description: Allen-Bradley Micro810 USB Adaptor

Item No: 2080USBPRGCAB

Required: No

Description: Allen-Bradley Micro800 Programming Cable USB Type A/B Male to Male

Published on 06 November 2026