X6CF418S

PROCONECT 3PX6 Extension Socket, 3P+N+E+2p, 500A, suits 185mm2 cable, w/ Crimp Terminals

HIGH CURRENT PLUGS

PROCONECT®

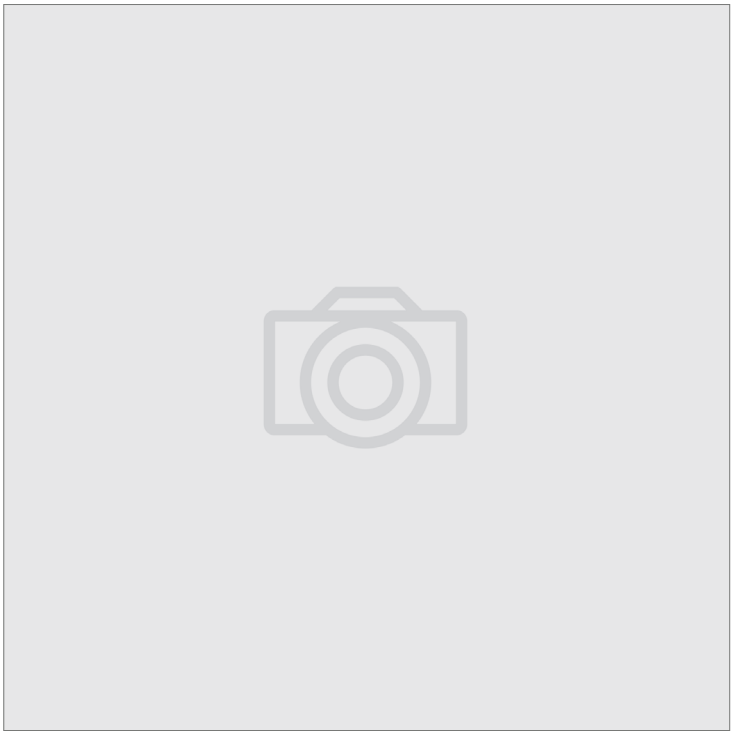

Component type	Round socket/plug for high currents
Range	3PX/3PV
Model	N/A
Product status	Existing

The Proconect 3PX and 3PV range of high-current plugs and sockets suit a variety of industries including mining, marine, transportation, and commercial. Available in either a screw ring (3PV) or push-pull connection (3PX) type. Current ratings of 160A to 660A (at 3.3 kV) and corrosion-proof aluminium construction make it ideal for the harsh Australian environment.

ELECTRICAL	Amperage	500 A
	Voltage	1-3300 V
	Contact configuration	3P+N+E+2P
CONSTRUCTION	Construction type	Coupling
	Material insulation body	Other
	Contact material	Other
	Material screw	Stainless steel
	IP rating	IP67
DIMENSIONS	Width	250 mm
	Length	476 mm
	Height	365 mm
	Weight	11.7 kg
ENVIRONMENT	Operating temperature	-30…60 °C

Published on 04 September 2026

X6CF418S

PROCONECT 3PX6 Extension Socket, 3P+N+E+2p, 500A, suits 185mm2 cable, w/ Crimp Terminals

HIGH CURRENT PLUGS

PROCONECT®

DIMENSIONAL DIAGRAM

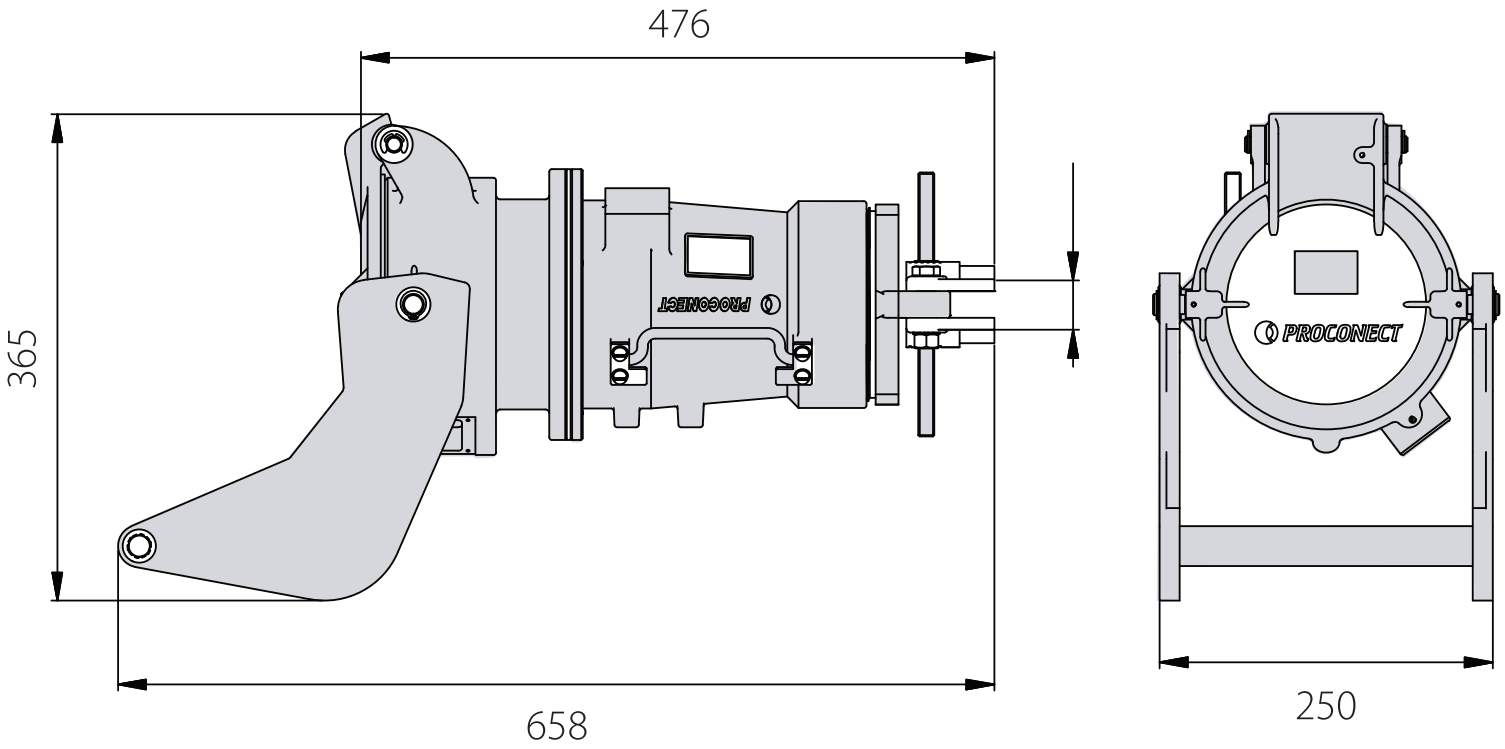

Published on 04 September 2026