X5DE41816

PROCONECT 3PX5 Socket Outlet, 3P+N+E+2p, 500A, suits 185mm2 cable w/ Crimp Terminals

HIGH CURRENT PLUGS

PROCONECT®

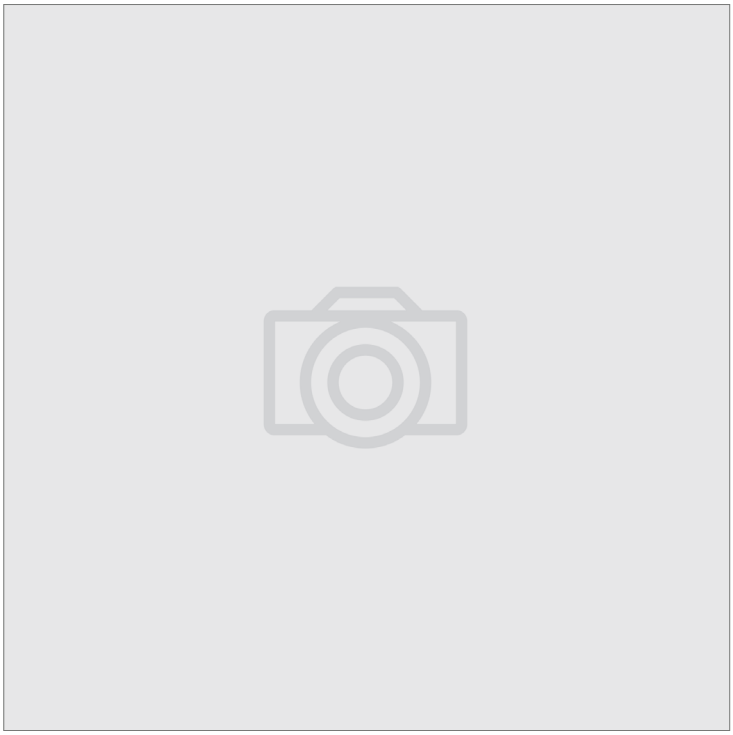

Component type	Round socket/plug for high currents
Range	3PX/3PV
Model	N/A
Product status	Existing

The Proconect 3PX and 3PV range of high-current plugs and sockets suit a variety of industries including mining, marine, transportation, and commercial. Available in either a screw ring (3PV) or push-pull connection (3PX) type. Current ratings of 160A to 660A (at 3.3 kV) and corrosion-proof aluminium construction make it ideal for the harsh Australian environment.

ELECTRICAL	Amperage	500 A
	Voltage	1-3300 V
	Contact configuration	3P+N+E+2P
CONSTRUCTION	Construction type	Outlet
	Material insulation body	Other
	IP rating	IP67
DIMENSIONS	Length	54.4 mm
	Height	225 mm
	Weight	5.3 kg
ENVIRONMENT	Operating temperature	-30…60 °C

Published on 11 September 2026

X5DE41816

PROCONECT 3PX5 Socket Outlet, 3P+N+E+2p, 500A, suits 185mm2 cable w/ Crimp Terminals

HIGH CURRENT PLUGS

PROCONECT®

DIMENSIONAL DIAGRAM

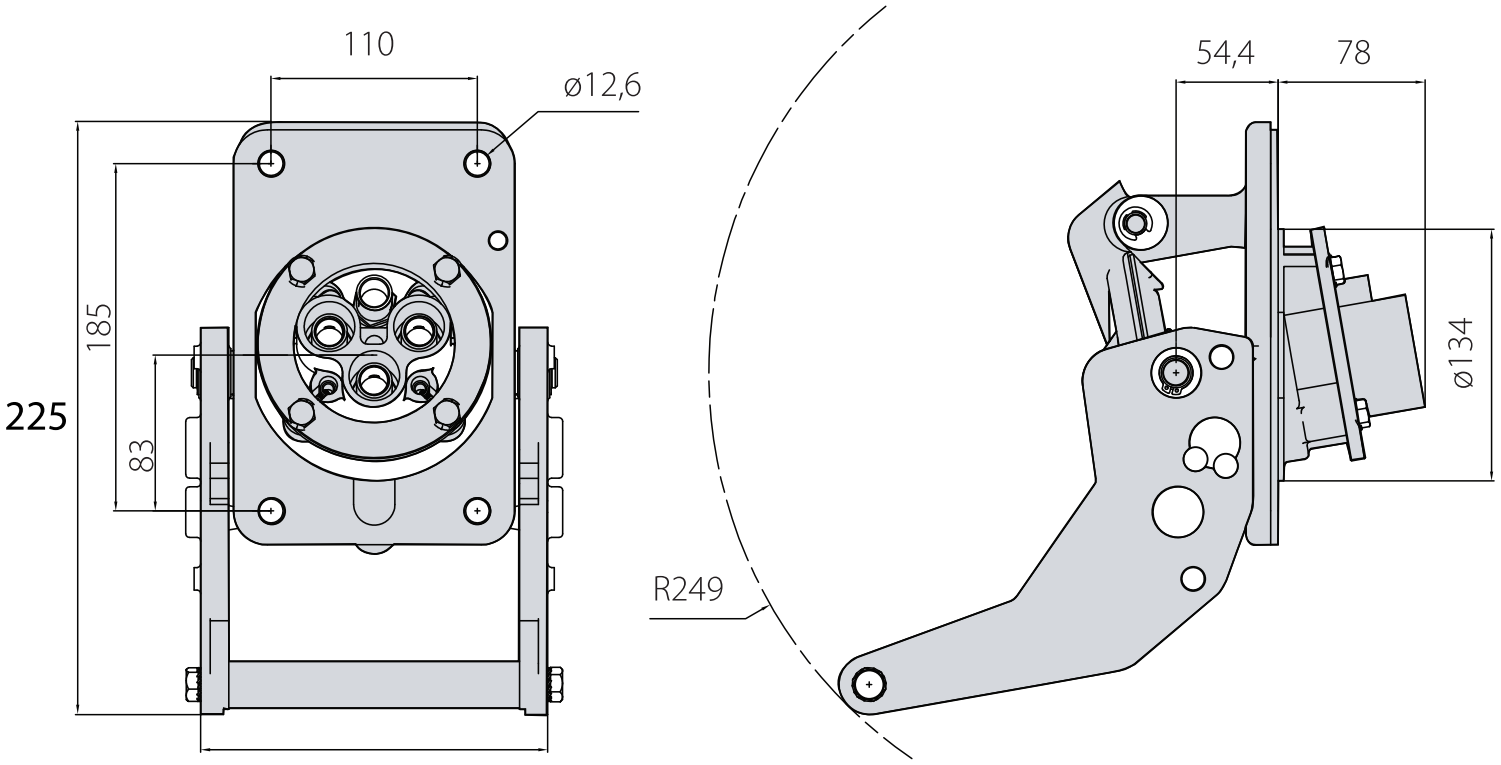

Published on 11 September 2026