VLB16004P

Socomec VLB Visual Load Break Switch Kit, w/ External Handle, 4P 1600A

LOAD BREAK SWITCHES

Component type	Switch disconnector
Range	VLB
Model	N/A
Product status	Existing

The Socomec VLB series of load break switches features visible and positive break indication ensuring safe switching. The user can visually assess the condition of the device and confirm isolation during maintenance or prior to operation. Available from 32 to 800A, suitable for safety focus applications and emergency load break with front or side operation based on your installation preference.

ELECTRICAL	Rated permanent current at AC-21, 400 V	1600 A
	Rated uninterrupted current Iu	1600 A
	Number of poles	4
	Rated operation power at AC-23, 400 V	560 kW
	Rated operation current Ie at AC-23a, 400 V	1000 A
	Rated operation current Ie at AC-23a, 500 V	800 A
	Rated operation current Ie at AC-23a, 690 V	200 A
	Rated short-time withstand current Icw	100 kA
	Rated insulation voltage Ui	1000 V
	Rated impulse withstand voltage Uimp	12 kV
	Type of control element	Long turning handle
	Rated permanent current at AC-23, 400 V	1600 A
	Number of auxiliary contacts as normally closed contact	0
	Number of auxiliary contacts as normally open contact	0
	Number of auxiliary contacts as change-over contact	0
CONSTRUCTION	Degree of protection (IP), front side	IP65
	Version as main switch	Yes
	Version as reversing switch	No
	Number of switches	1
	Suitable for front mounting 4-hole	No
	Suitable for front mounting centre	No
	Suitable for distribution board installation	Yes
	Suitable for intermediate mounting	No
	Interlockable	Yes

VLB16004P

Socomec VLB Visual Load Break Switch Kit, w/ External Handle, 4P 1600A

LOAD BREAK SWITCHES

socomec Innovative Power Solutions

MECHANICAL	Padlock locking	Yes
DIMENSIONS	Height	360 mm
	Width	560 mm
	Depth	160 mm

DIMENSIONAL DIAGRAM

SIDER VLB 630 to 1600 A

Direct front operation

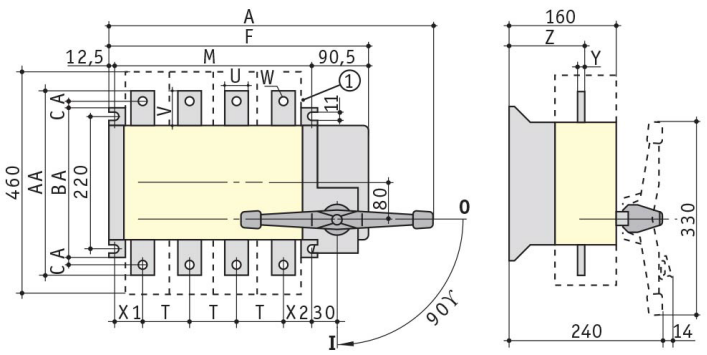

1 Terminal screen.

External front operation

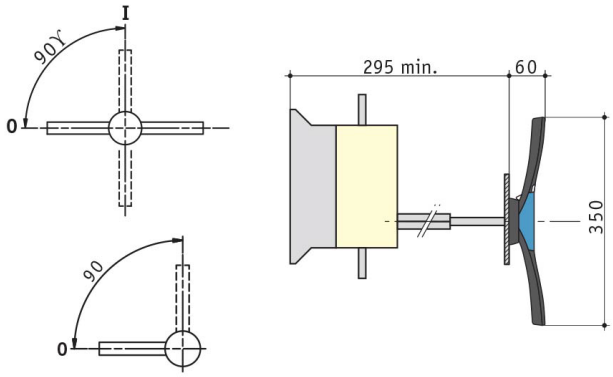

Conventional fixing (from rear): **D** = 31 to 37 mm
Fast fixing (external, door closed): **D** = 37 mm

Rating (A)	Overall dimensions A 3p	A 4p	Switch body F 3p	F 4p	Switch mounting M 3p	M 4p	T	U	V	W	Connection terminals X1	X2	Y	Z	AA	BA	CA
630	463	543	358	438	255	335	80	40	50	13	42.5	52.5	6	106	300	260	20
800	463	543	358	438	255	335	80	50	60	–	47.5	47.5	6	106	320	–	–
1250	555	675	450	560	347	457	120	63	65	–	46.5	60.5	7	107	330	–	–
1600	555	675	450	560	347	457	120	80	80	–	46.5	60.5	15	111	360	–	–

Published on 24 July 2026