TA3276001A

IME TA327 Solid Core Current Transformer 600A/1A 27mm 20VA Class 1, 15VA Class 0.5

CURRENT TRANSFORMERS AND TRANSDUCERS

IME

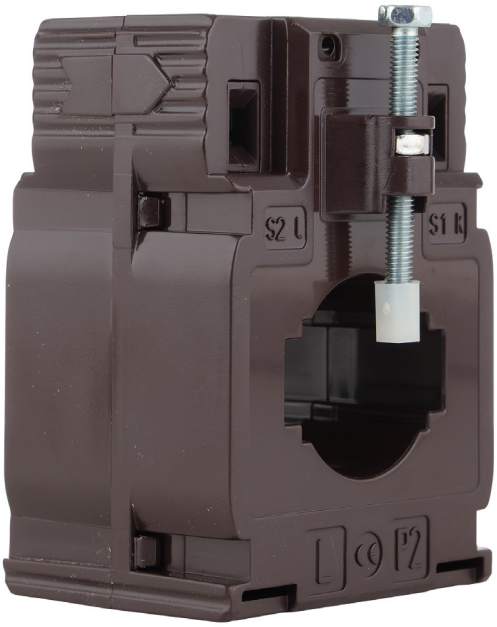

Component type	Current transformer
Range	Solid Core CT
Model	N/A
Product status	Existing

The IME solid core current transformers are highly accurate and cover a broad range of sizes and form factors that suit busbar, cable or protection class applications.

ELECTRICAL	Primary rated current	600 A
	Secondary current on CT	1 A
	Rated operating frequency	47-63 Hz
	Max. operating voltage (Umax)	0.72 V
	Rated short time thermal current Ith (x primary current)	36 kA
	Rated continuous thermal current Icth (x primary current)	36 kA
	Accuracy class	0.5
	Insulation class (IEC 61869-1, 61869-2)	B
	Security factor	5
	Rated burden, class 0.5	15 VA
	Rated burden, class 1	20 VA
	Power loss	7 W
	Over current limiting factor	FS 5
	Secondary rated apparent power	15 VA
CONSTRUCTION	Current transformer type	Solid core
	Material housing	Polycarbonate (PC)
	Model	Attachable current transformer
	With shock protection	Yes
	Snap mounting	Yes
	Secondary connection	Screw connection
	Number of primary inputs	1
DIMENSIONS	Opening diameter	27 mm
ENVIRONMENT	Storage temperature	-40…85 °C

Published on 02 December 2025

TA3276001A

IME TA327 Solid Core Current Transformer 600A/1A 27mm 20VA Class 1, 15VA Class 0.5

CURRENT TRANSFORMERS AND TRANSDUCERS

DIMENSIONAL DIAGRAM

***Opzione / Option**

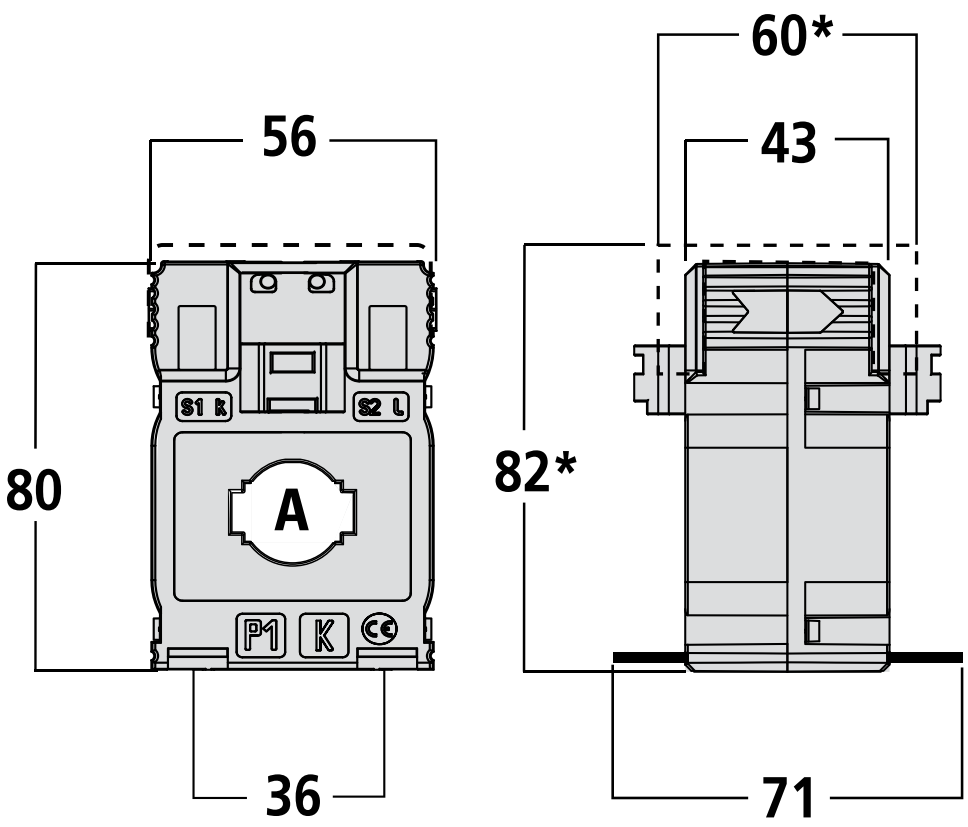

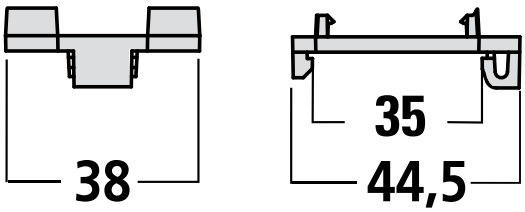

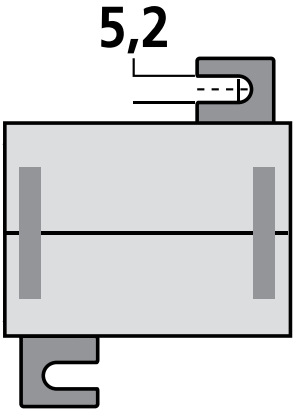

Fissaggio per binario DIN
DIN rail mounting

Fissaggio a vite
Screw type mounting

Published on 02 December 2025