TA327505A

IME TA327 Solid Core Current Transformer 50A/5A 27mm 1.5VA Class 3

CURRENT TRANSFORMERS AND TRANSDUCERS

IME

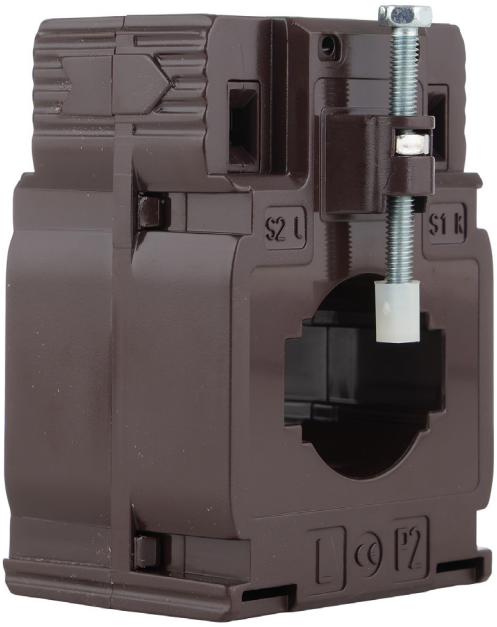

Component type	Current transformer
Range	Solid Core CT
Model	N/A
Product status	Existing

The IME solid core current transformers are highly accurate and cover a broad range of sizes and form factors that suit busbar, cable or protection class applications.

ELECTRICAL	Primary rated current	50 A
	Secondary current on CT	5 A
	Rated operating frequency	47-63 Hz
	Max. operating voltage (Umax)	0.72 V
	Rated short time thermal current Ith (x primary current)	3 kA
	Rated continuous thermal current Icth (x primary current)	3 kA
	Accuracy class	3
	Insulation class (IEC 61869-1, 61869-2)	B
	Security factor	5
	Power loss	7 W
	Over current limiting factor	FS 5
	Secondary rated apparent power	1.5 VA
	Calibrated	No
CONSTRUCTION	Current transformer type	Solid core
	Material housing	Polycarbonate (PC)
	Model	Through-feed current converter
	With shock protection	Yes
	Snap mounting	Yes
	Secondary connection	Screw connection
	Number of primary inputs	1
DIMENSIONS	Opening diameter	27 mm
ENVIRONMENT	Storage temperature	-40…85 °C

Published on 19 March 2025

CURRENT TRANSFORMERS AND TRANSDUCERS
IME

DIMENSIONAL DIAGRAM

***Opzione / Option**

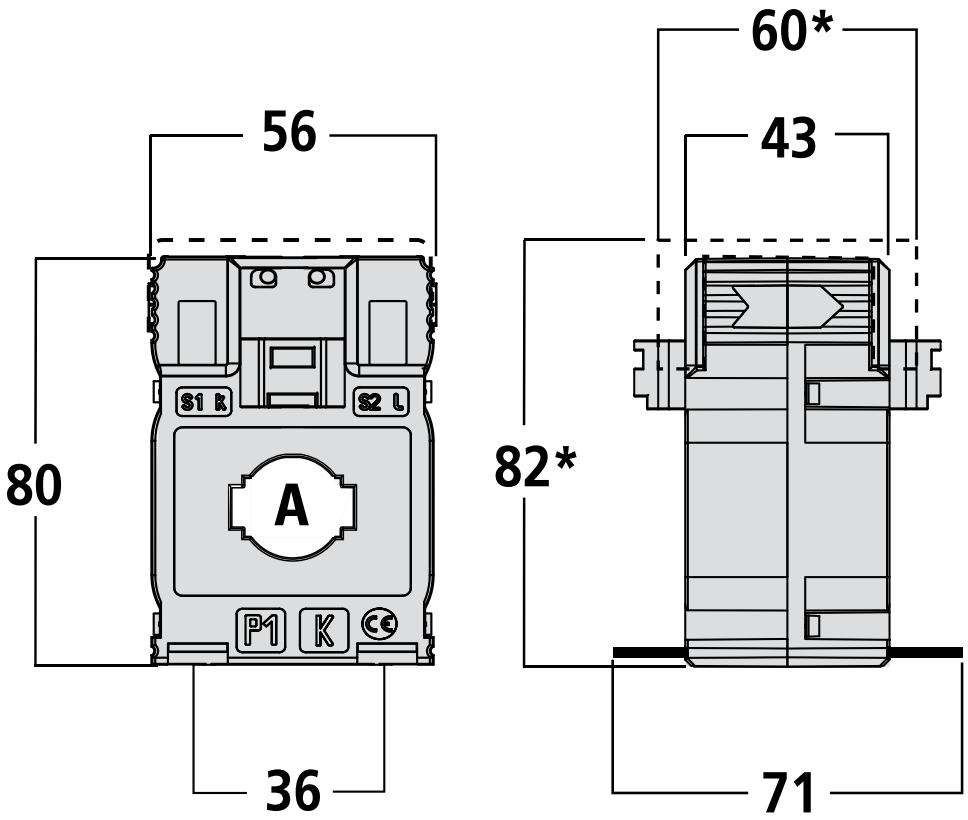

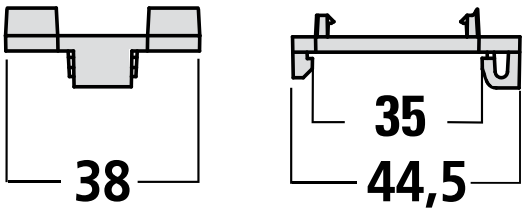

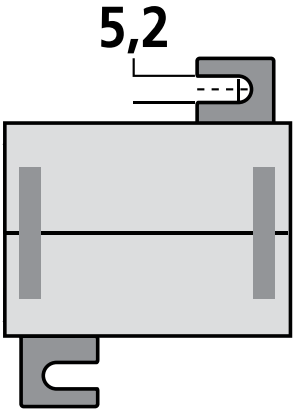

Fissaggio per binario DIN
DIN rail mounting

Fissaggio a vite
Screw type mounting