T2HSESC100

Terasaki TemBreak 2 Handle Label Plate 100mm MCCBs

MOULDED CASE CIRCUIT BREAKERS

NHP TERASAKI



Component type	Accessories/spare parts for low-voltage switch technology
Range	TemBreak 2
Model	N/A
Product status	Existing

Superseded range of Terasaki MCCBs.

CONSTRUCTION

Accessory	Yes
Type of accessory/spare part	Device labeling system

Published on 30 October 2026

T2HSESC100

Terasaki TemBreak 2 Handle Label Plate 100mm MCCBs

MOULDED CASE CIRCUIT BREAKERS

DIMENSIONAL DIAGRAM

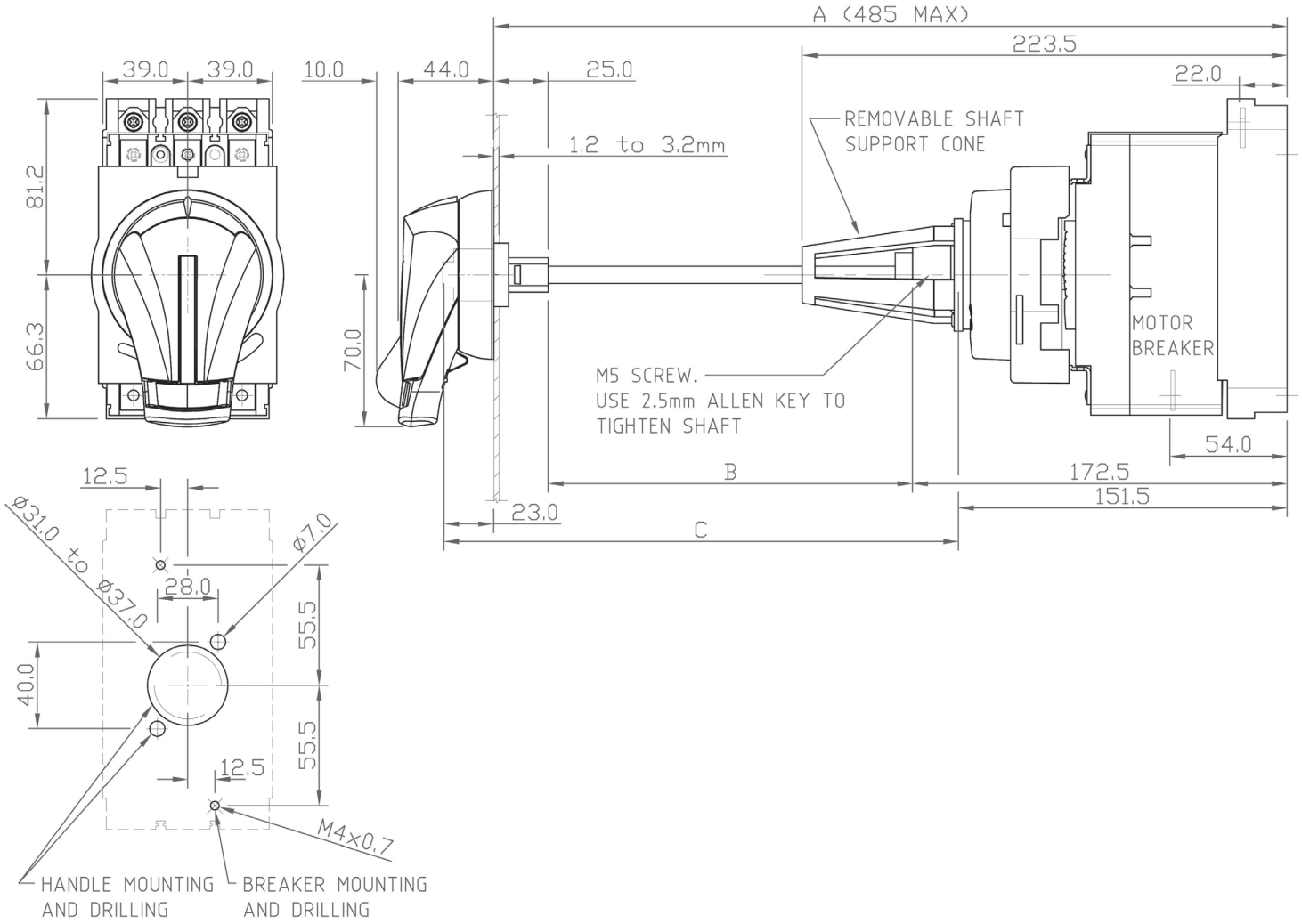

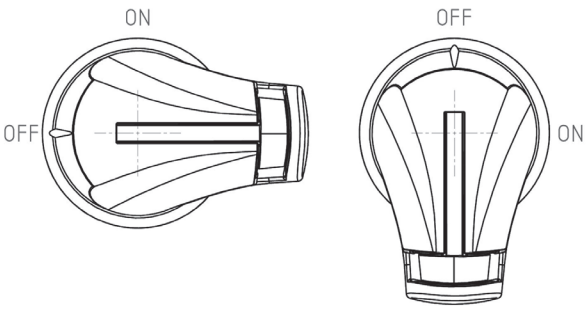

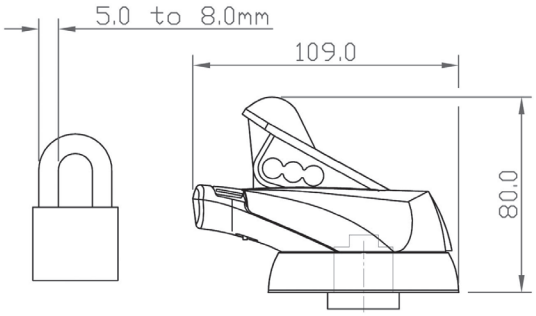

Published on 30 October 2026