P160F2275FF

Terasaki TemBreak PRO MCCB 160 Frame 36kA 2P 75A Fix. Therm. Fix. Mag.

MOULDED CASE CIRCUIT BREAKERS



Component type	Power switching circuit breaker
Range	TemBreak PRO
Model	N/A
Product status	Existing

The TemBreak PRO range is the ultimate solution for reliable circuit protection. Ampere frame sizes range from 160A to 3200A and breaking capacities from 25kA to 200kA. Protect your electrical systems today and connect to the information systems of tomorrow with trip unit technologies such as Thermal Magnetic, Basic and SMART Electronic, as well as ground fault and earth leakage protection.

ELECTRICAL	Rated current In	75 A
	Number of poles	2
	Max. rated operation voltage Ue AC	690 V
	Rated ultimate short-circuit breaking capacity Icu at 415 V, 50 Hz	36 kA
	Rated service short-circuit breaking capacity Ics at 415 V, 50 Hz	36 kA
	Type of protection trip unit	Thermal/magnetic release
	Trip curve	Fixed thermal, fixed magnetic
	Frame size rating	160 A
	Position of connection for main current circuit	Front side
	Rated frequency	50-60 Hz
	Rated insulation voltage Ui	800 V
	Suitable for isolation	Yes
	Rated short circuit breaking capacity, Icu 690V AC	6 kA
	Rated short circuit breaking capacity, Ics 690V AC	6 kA
	Rated impulse withstand voltage Uimp	8 kV
	Over voltage category	IV
	Reverse connection of supply possible	Yes
	AC power loss per pole at In	5.9 W
	Electrical life at Un, In (service cycles)	30000 cycles
	Type of electrical connection of main circuit	Screw connection
	Power loss	11.8 W
MECHANICAL	DIN rail (top hat rail) mounting optional	Yes
	Mechanical life (service cycles)	50000 cycles
	Max. vibration acceleration	19 m/s²

Published on 23 November 2026

P160F2275FF

Terasaki TemBreak PRO MCCB 160 Frame 36kA 2P 75A Fix. Therm. Fix. Mag.

MOULDED CASE CIRCUIT BREAKERS

MECHANICAL	Max. vibration frequency, operational	16.7 Hz
	Max. vibration duration	12 min
DIMENSIONS	Connectable conductor cross section	1.5-70 mm²
	Height	130 mm
	Width	60 mm
	Pole connection pitch	30 mm
	Built-in depth	68 mm
	Depth (toggle included)	95.5 mm
	Weight	0.7 kg
ENVIRONMENT	Pollution degree	3
	Rated surrounding temperature without derating	45 °C
	Rated temperature	-5…70 °C
	Maximum operating temperature	70 °C
	Storage temperature	-10…70 °C
	Allowable relative humidity	0-85 %
	Max. altitude before derating	2000 m
CERTIFICATES/APPROVALS	Standard	AS/NZS IEC 60947.2

P160F2275FF

Terasaki TemBreak PRO MCCB 160 Frame 36kA 2P 75A Fix. Therm. Fix. Mag.

MOULDED CASE CIRCUIT BREAKERS

DIMENSIONAL DIAGRAM

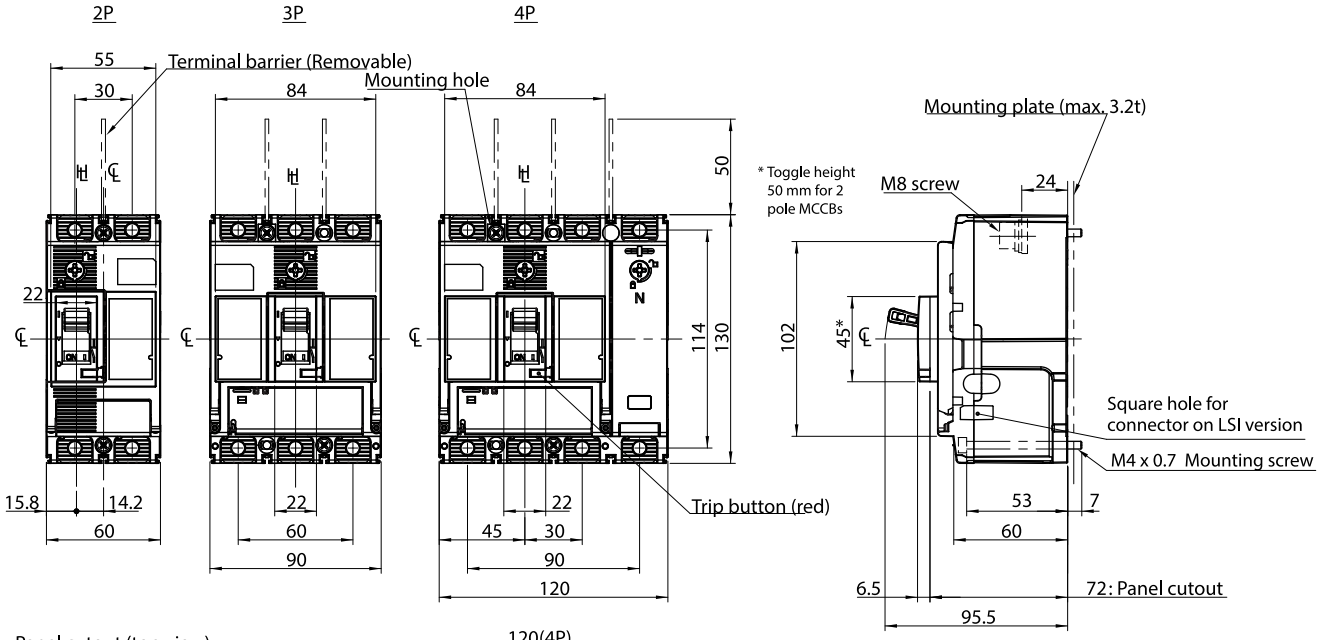

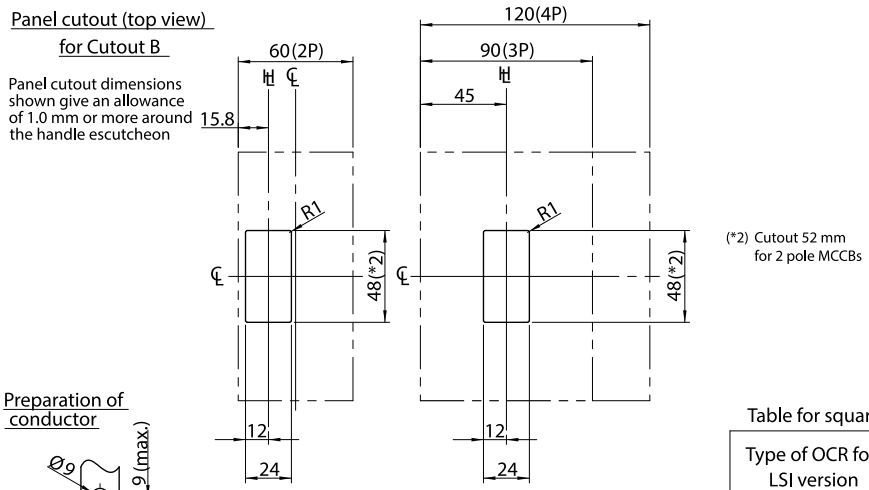

Table for square hole for connector on LSI version

Type of OCR for LSI version	A pole (PAP)		C/N pole (ECP)	
	3P	4P	3P	4P
LSI	Hole	Hole	no	no
LSIG	Hole	Hole	Hole	no

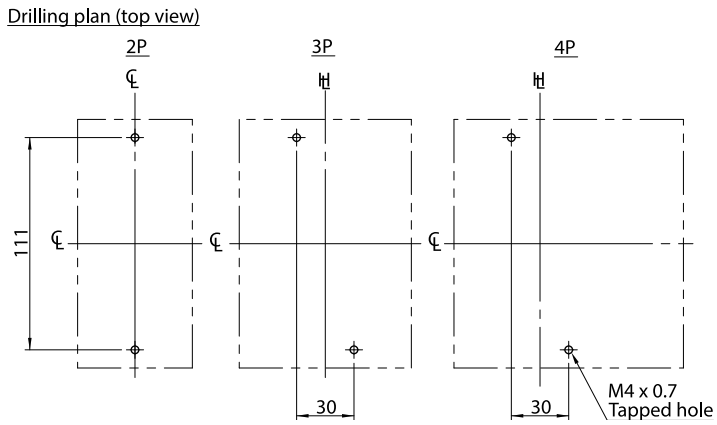

Published on 23 November 2026

P160F2275FF

Terasaki TemBreak PRO MCCB 160 Frame 36kA 2P 75A Fix. Therm. Fix. Mag.

MOULDED CASE CIRCUIT BREAKERS

RELATED PRODUCTS

ACCESSORY



Item No: T2BA16L3SH
Required: No
Description: Terasaki TemBreak PRO Interpole Barriers for A160/P160 Qty 2



Item No: T2HL25L
Required: No
Description: Terasaki TemBreak PRO Non Captive Toggle Lock 5 x 16.5mm Slot for A160/ A250/P160/P250



Item No: T2SH00LA10T
Required: No
Description: Terasaki TemBreak PRO Shunt Trip for A/P Models 110V AC



Item No: T2SH00LA10WA
Required: No
Description: Terasaki TemBreak PRO Shunt Trip for A/P Models 110-120V AC Wired Type



Item No: T2SH00LA20T
Required: No
Description: Terasaki TemBreak PRO Shunt Trip for A/P Models 230-240V AC

Item No: T2SH00LA40T
Required: No
Description: Terasaki TemBreak PRO Shunt Trip for A/P Models 400-415V AC



Item No: T2SH00LA40WA
Required: No
Description: Terasaki TemBreak PRO Shunt Trip for A/P Models 380-450V AC Wired Type



Item No: T2SH00LD02T
Required: No
Description: Terasaki TemBreak PRO Shunt Trip for A/P Models 24V DC



Item No: T2SH00LD02WA
Required: No
Description: Terasaki TemBreak PRO Shunt Trip for A/P Models 24V DC Wired Type



Item No: T2SH00LD04WA
Required: No
Description: Terasaki TemBreak PRO Shunt Trip for A/P Models 48V DC Wired Type



Item No: T2SH00LD10WA
Required: No
Description: Terasaki TemBreak PRO Shunt Trip for A/P Models 110-120V DC Wired Type



Item No: T2SH00LD20WA
Required: No
Description: Terasaki TemBreak PRO Shunt Trip for A/P Models 200-240V DC Wired Type

Item No: TPCF162SLNPH
Required: No
Description: Terasaki TemBreak PRO Terminal Cover CF Long Style for 2P P160 MCCB Qty 1

Item No: TPCF162SSNPH
Required: No
Description: Terasaki TemBreak PRO Terminal Cover CF Short Style for 2P P160 MCCB Qty 1



Item No: TPCF16SL
Required: No
Description: Terasaki TemBreak PRO Terminal Cover Clip for P160

Published on 23 November 2026