NTLT800

Mersen BS Fuse gG 165 to 229mm Centres 500V AC 800A

PANELBOARDS
MODULAR



Component type	HRC fuse
Range	BS Fuses
Model	N/A
Alternative	NO ALTERNATIVE ITEM

NHP's British Standard (BS) Fuses offer a reliable and cost-effective solution for protecting electrical systems against overcurrent and short-circuit faults. The NHP BS Fuses conform to BS 88, which sets out requirements for the design, performance, and testing of fuses used in electrical systems in the UK and wider geographies.

ELECTRICAL	Type of current	AC
	Utilization category	gL/gG (cable protection/equipment protection)
	Breaking capacity	80 kA
DIMENSIONS	Centre-to-centre distance of connections	165 mm
	Height	267 mm
	Width	73 mm

Published on 19 March 2025

NTLT800

Mersen BS Fuse gG 165 to 229mm Centres 500V AC 800A

PANELBOARDS
MODULAR

DIMENSIONAL DIAGRAM

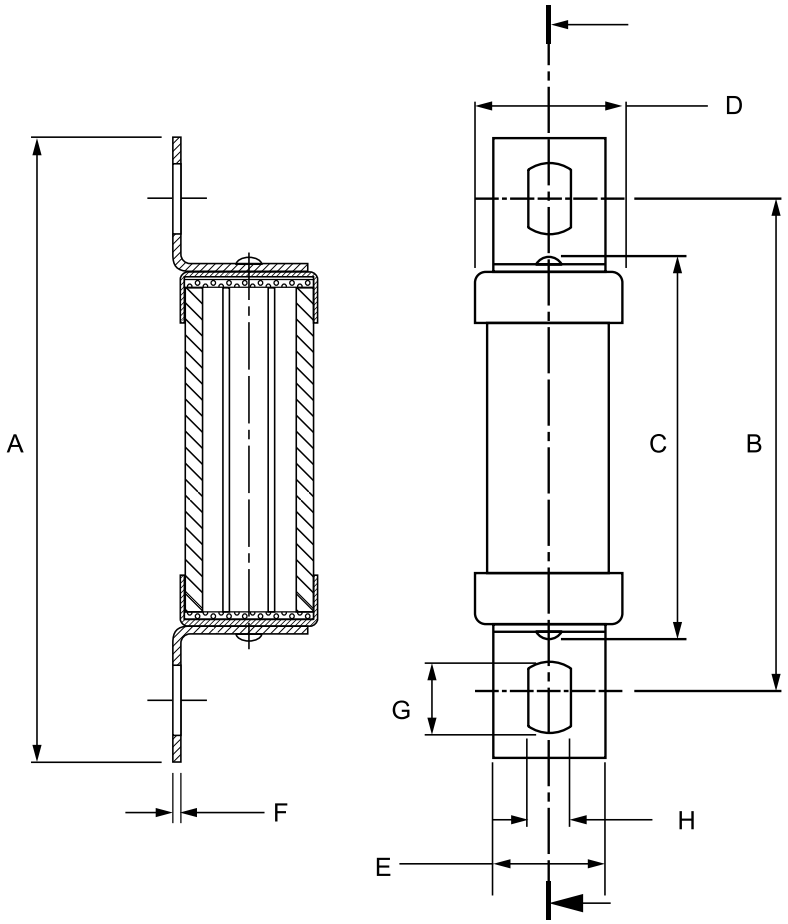

Series	Category	Brand	A Overall Length	B Fitting Centres	C Body Length	D Body Diameter	E Tag Width	F Tag Thickness	G Hole Length	H Hole Width
NTM355-400	C1	FuseMaster	210	133/184	77	50.5	25.4	6.5	12.5	10.3
NTM400M	C1	Lawson	210	133/184	51	61	26	6.4	16	10.3
NTTM	C2	FuseMaster	207	133/184	71	70	25.4	6.5	12.5	10.3
NTLM	C3	Lawson	210	133/184	56	73	26	9.5	16	10.3
NTT	-	Lawson	267	165/229	54	61	26	7.8	16	10.3
NTLT670-800	-	Lawson	267	165/229	56	73	26	9.5	16	10.3

Published on 19 March 2025