NTIS80

Mersen BS Fuse gG Size A3 73mm Centres 500V AC 80A

PANELBOARDS
MODULAR



Component type	HRC fuse
Range	BS Fuses
Model	N/A
Product status	Existing

NHP's British Standard (BS) Fuses offer a reliable and cost-effective solution for protecting electrical systems against overcurrent and short-circuit faults. The NHP BS Fuses conform to BS 88, which sets out requirements for the design, performance, and testing of fuses used in electrical systems in the UK and wider geographies.

ELECTRICAL	Type of current	AC
	Rated voltage AC	415 V
	Utilization category	gL/gG (cable protection/equipment protection)
	Breaking capacity	80 kA
CONSTRUCTION	Fuse construction type according to IEC 60269	A3
DIMENSIONS	Centre-to-centre distance of connections	73 mm
	Height	87.12 mm
	Width	22.6 mm
	Depth	21.08 mm
	Weight	0.09 kg

Published on 23 March 2026

NTIS80

Mersen BS Fuse gG Size A3 73mm Centres 500V AC 80A

PANELBOARDS
MODULAR

DIMENSIONAL DIAGRAM

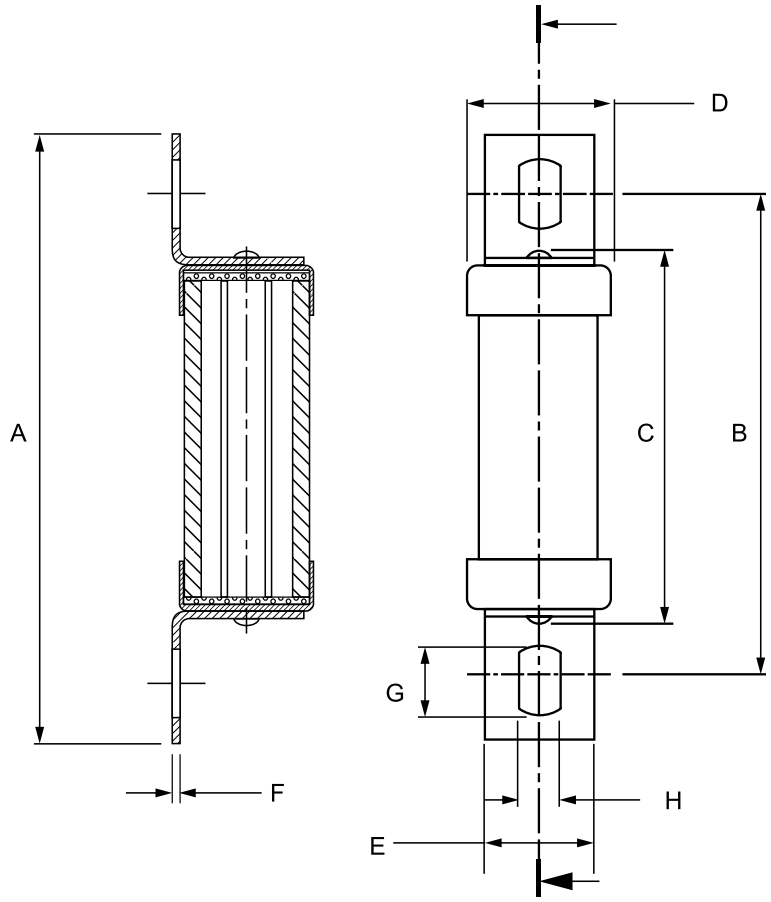

Series	Category	Brand	A Overall Length	B Fitting Centres	C Body Length	D Body Diameter	E Tag Width	F Tag Thickness	G Hole Length	H Hole Width
NTIA 2 – 32	A2	Mersen	84.5	73	55	13.5	8.7	1.2	8	5.5
NTIA 32M	A2	Mersen	86	73	49	21.9	9	1.2	8	5.5
NTIS 36 – 63	A3	Mersen	88.5	73	56	17.5	-	1.2	-	5.5
NTIS 80 – 100	A3	Mersen	89	73	49	26.9	13	1.2	-	5.5
NTIS 63M	A3	Mersen	89	73	49	26	13	1.2	-	5.5
NTIS 100M	A3	Mersen	89	73	49	26	13	1.2	-	5.5
NOS 80 - 100	as A3	FuseMaster	89	73	49	26	13	1.2	-	5.5
NOS 100M	as A3	Lawson	89	73	49	TBC	13	1.2	-	5.5

Published on 23 March 2026