MOX12556B

Moflash Xenon Beacons Edison Screw Cap 2.7 Joules Flashing Mode IP65 230V AC W/S Mount Lens Blue

BEACONS



Component type	Signalling device
Range	Xenon Beacon
Model	N/A
Alternative	CALL FOR ALTERNATIVE

The Moflash range of Xenon beacons are ideal for light and heavy industrial signalling, fire alarm and process control automation applications. Providing brilliant white light instantaneously, an effective bright visual signal. Features include 1-25 Joules, up to 360° light output, a wide choice of colours, sizes, configurations, voltages and mounting options.

ELECTRICAL	Rated operation current Ie	0.02 A
	Nominal voltage	230-230 V
	Type of current	AC
COMMUNICATION	Compatible with Apple HomeKit	No
	Compatible with Google Assistant	No
	Compatible with Amazon Alexa	No
CONSTRUCTION	Type of indication	Optic
	Colour of lamp hood	Blue
	Mounting method	Other
	Colour housing	Black
	IP rating	IP65
MECHANICAL	Suitable for ceiling mounting	Yes
PHOTOMETRIC	Lamp type	Xenon
	Illumination mode	Flash light
DIMENSIONS	Weight	0.17 kg
ENVIRONMENT	Rated temperature	-25…55 °C

Published on 08 September 2026

MOX12556B

Moflash Xenon Beacons Edison Screw Cap 2.7 Joules Flashing Mode IP65 230V AC W/S Mount Lens Blue

BEACONS

DIMENSIONAL DIAGRAM

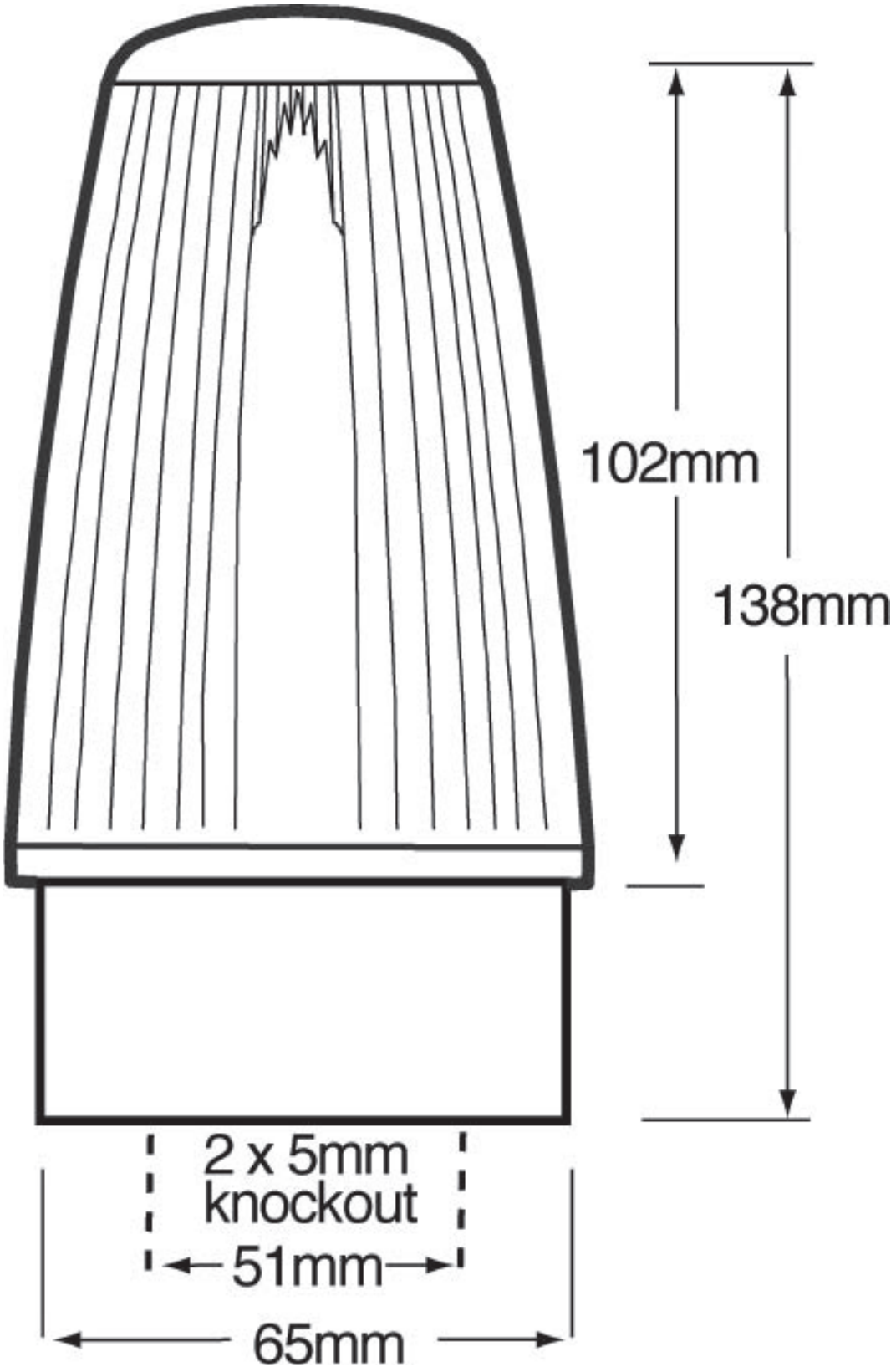

Published on 08 September 2026