ISOSO532PRWLB

NHP ISO Socket Outlet, 5 Round Pins 32A 500V AC, w/o Base, Resistant White

ISO
INDUSTRIAL PLUGS AND SOCKETS



Component type	Socket outlet according to AS/NZS 3123
Range	ISO
Model	N/A
Product status	Existing

The often overlooked essentials that are always indispensable. Choose from NHP's range of 400+ industrial, isolating and high-current plugs, sockets and switches available for a wide breadth of applications.

ELECTRICAL	Nominal voltage	500 V
	Rated current	32 A
CONSTRUCTION	Material	Plastic
	Colour	White
	Number of active pins (round)	5
	With base	No
	IP rating	IP66
DIMENSIONS	Base depth	63 mm
	Conductor cross section solid (solid, stranded)	4-16 mm²
	Height	101 mm
	Width	101 mm

Published on 02 August 2026

ISOSO532PRWLB

NHP ISO Socket Outlet, 5 Round Pins 32A 500V AC, w/o Base, Resistant White

NHP ISO
INDUSTRIAL PLUGS AND SOCKETS

DIMENSIONAL DIAGRAM

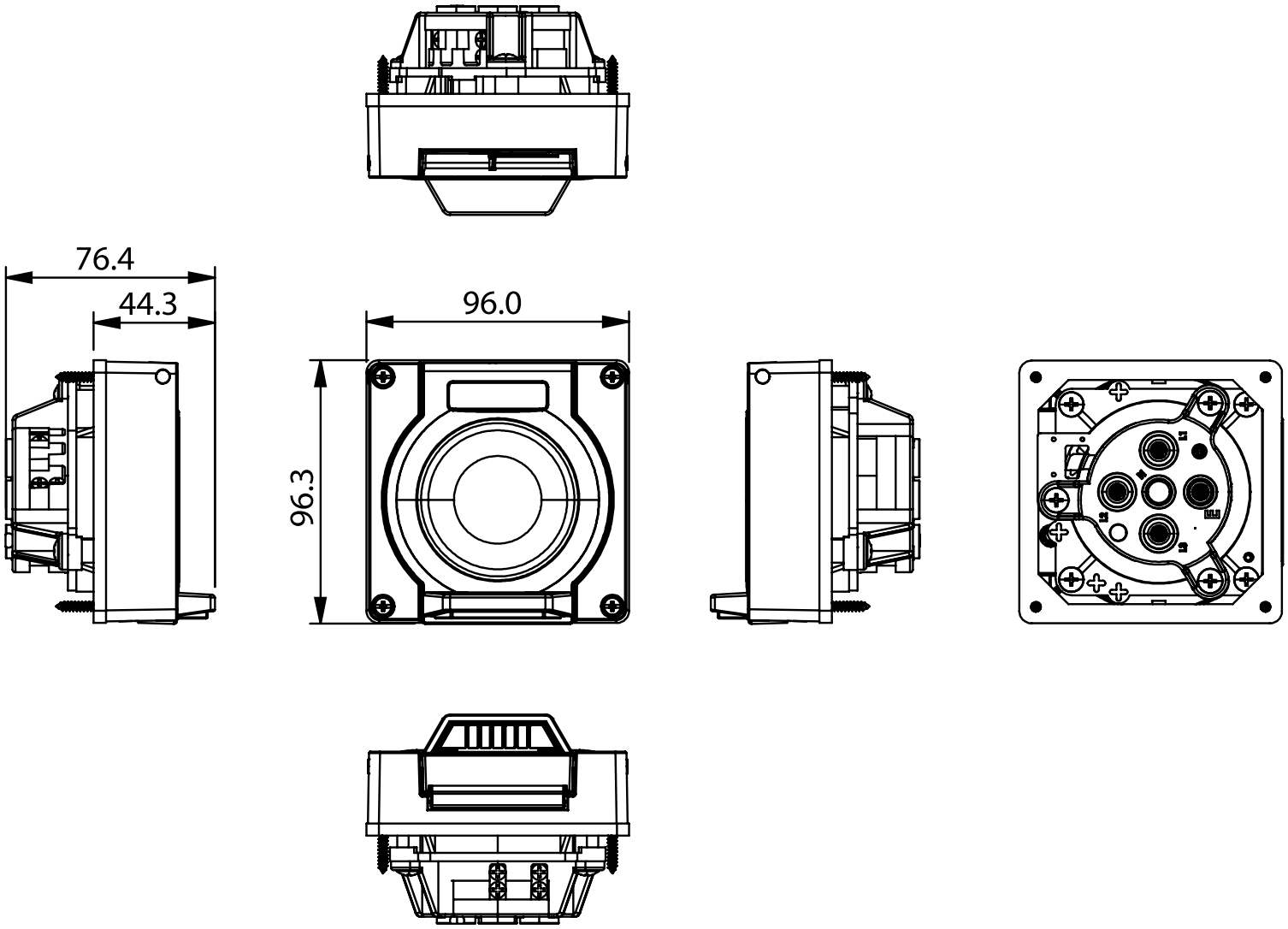

Published on 02 August 2026