# ISOEX432P

**NHP ISO Extension Socket, 4 Round Pins 32A 500V AC, Electric Orange**

ISO
INDUSTRIAL PLUGS AND SOCKETS




| | |
|---|---|
| **Component type** | Coupling according to AS/NZS 3123 |
| **Range** | ISO |
| **Model** | N/A |
| **Product status** | Existing |

The often overlooked essentials that are always indispensable. Choose from NHP's range of 400+ industrial, isolating and high-current plugs, sockets and switches available for a wide breadth of applications.

| | | |
|---|---|---|
| **ELECTRICAL** | Rated current | 32 A |
| | Nominal voltage | 500 V |
| | Number of phases | 3 |
| | With neutral conductor contact | No |
| **CONSTRUCTION** | Material | Plastic |
| | Colour | Orange |
| | Type of cover | Hinged lid |
| | IP rating | IP66 |
| | Number of active pins (round) | 4 |
| | Angle of plug | Straight |
| | Resistant to chemicals | No |
| **DIMENSIONS** | Conductor cross section solid (solid, stranded) | 6-16 mm² |



Published on 29 June 2026

# ISOEX432P

**NHP ISO Extension Socket, 4 Round Pins 32A 500V AC, Electric Orange**

ISO
INDUSTRIAL PLUGS AND SOCKETS

## DIMENSIONAL DIAGRAM

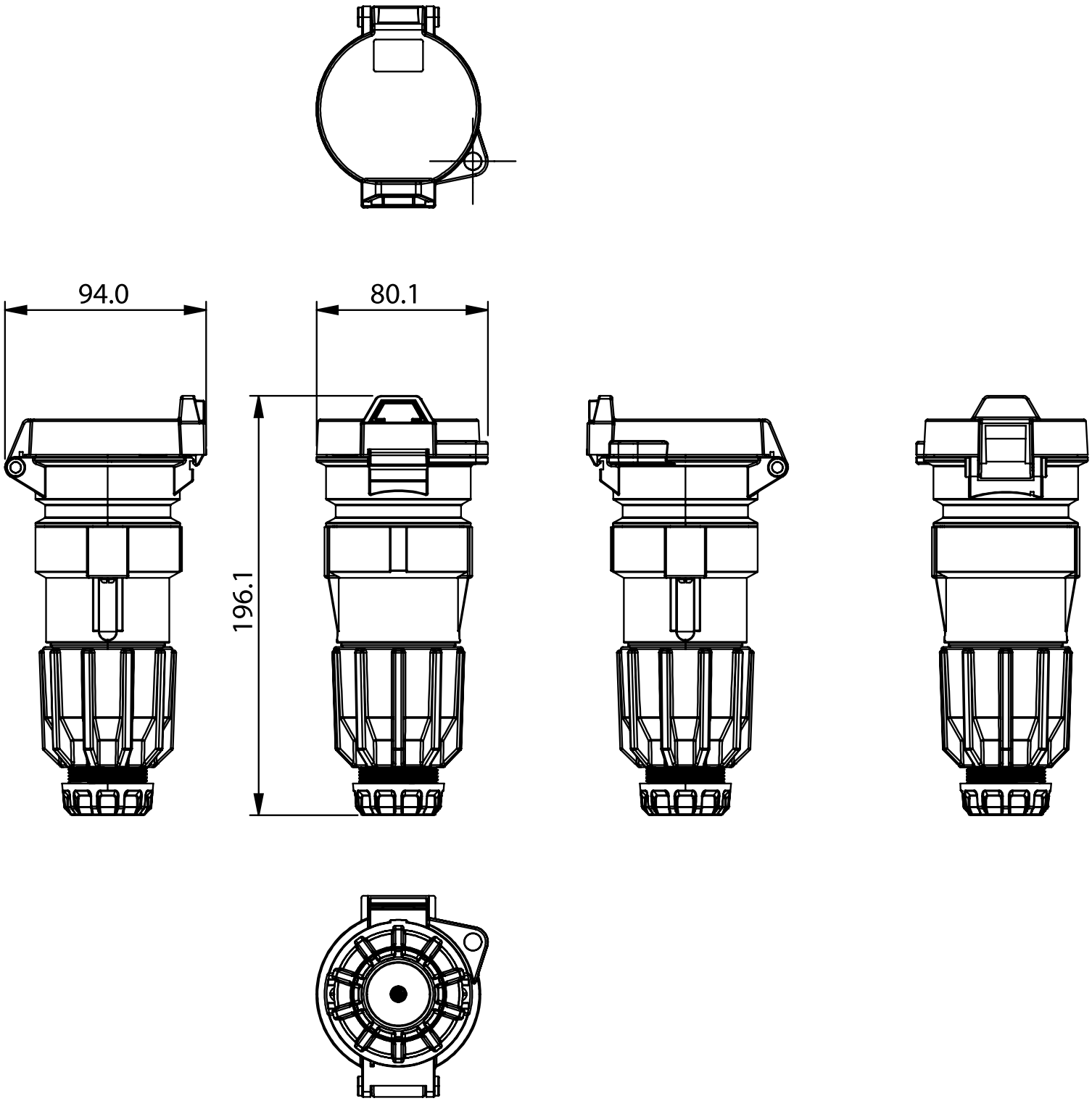




Published on 29 June 2026