CPTPSC212230IR

Cirprotec PSC Surge Protection Device Type 1 and 2 1 Phase L-N and N-PE limp 12.5kA Imax 65kA 240VAC

SURGE PROTECTION DEVICES



Component type	Surge protection device for power supply systems
Range	PSC
Model	N/A
Product status	Existing

The Cirprotec CPS Block Surge Diverters are proven to exceed UL 1449 4th Edition standards, ensuring their reliability and effectiveness in protecting your electrical equipment from power surges. A compact design ensures easy installation and integration into any electrical system, saving both time and resources.

ELECTRICAL	**Nominal discharge surge current (8/20)**	12.5 kA
	Max. discharge surge current (8/20)	65 kA
	Nominal voltage AC	240 V
	Max. continuous voltage AC	275 V
	Voltage protection level	1.3 kV
CONSTRUCTION	**Mounting method**	DIN rail (top hat rail) 35 mm
	Construction size	2 modular spacing
	IP rating	IP20

Published on 08 December 2025

CPTPSC212230IR

Cirprotec PSC Surge Protection Device Type 1 and 2 1 Phase L-N and N-PE limp 12.5kA Imax 65kA 240VAC

SURGE PROTECTION DEVICES

DIMENSIONAL DIAGRAM

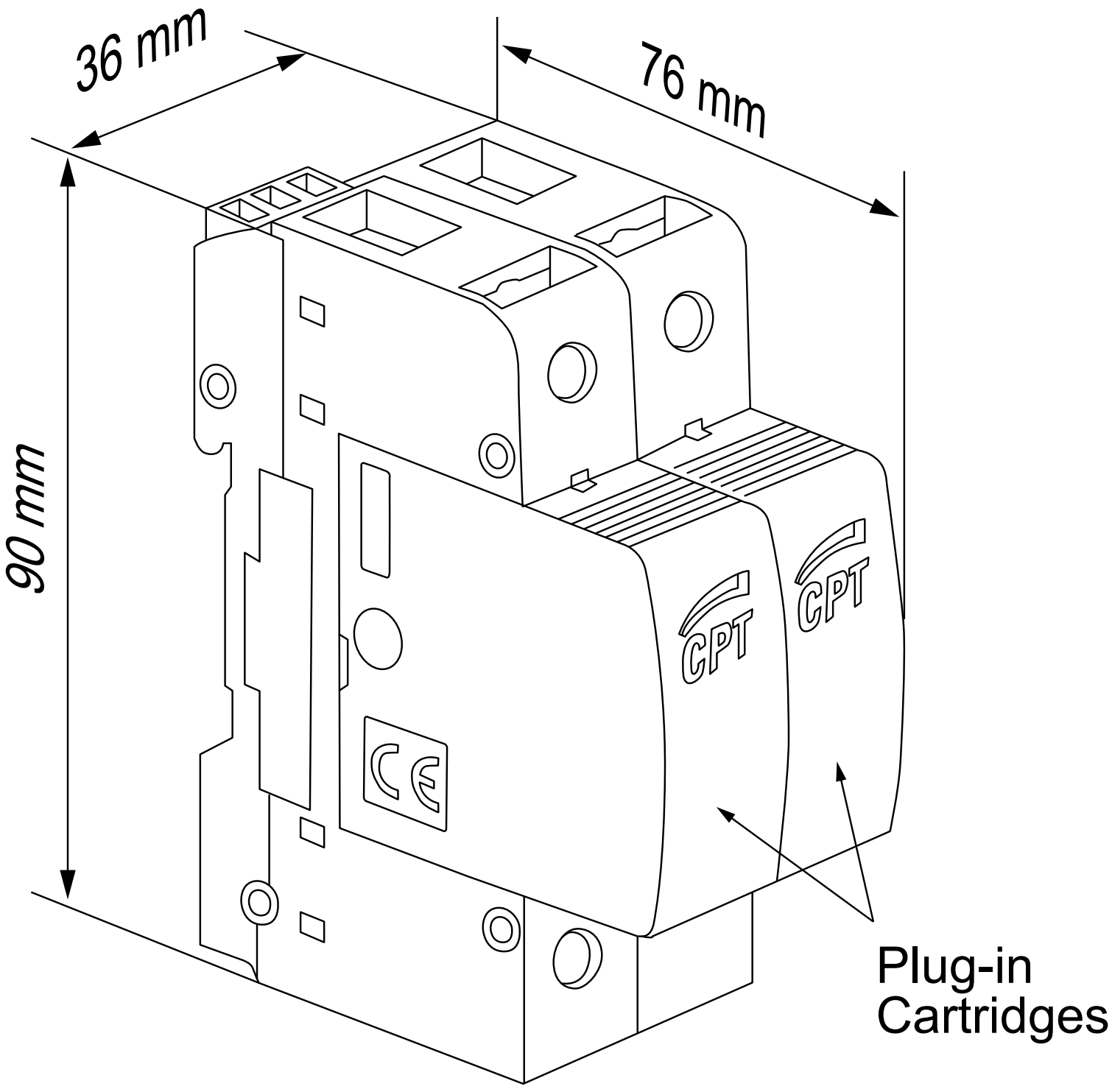

Published on 08 December 2025