855BGMS20R8

Allen-Bradley Beacon Xenon Mini Square Strobe 5J 240V AC Yellow

BEACONS



Component type	Signalling device
Range	855P
Model	N/A
Product status	Existing

The Allen-Bradley 855P range of panel mount signal alarms feature products such as sounders, LED beacons, Xenon strobes, combined sounder/beacon units, and dual-circuit alarm units. Designed for local indication of machine or equipment status while creating space efficiency with easily installed devices that are also rear-securing and finger safe.

ELECTRICAL	Nominal voltage	230 V
	Type of current	AC
COMMUNICATION	Compatible with Apple HomeKit	No
	Compatible with Google Assistant	No
	Compatible with Amazon Alexa	No
CONSTRUCTION	Colour of lamp hood	Yellow
	Mounting method	Surface mounting
	Material housing	Polycarbonate (PC)
	Colour housing	Grey
	IP rating	IP66
	Degree of protection (NEMA)	13
MECHANICAL	Suitable for ceiling mounting	Yes
PHOTOMETRIC	Lamp type	Xenon
	Illumination mode	Flash light
DIMENSIONS	Weight	0.2 kg
ENVIRONMENT	Rated temperature	-25…55 °C

Published on 06 November 2026

855BGMS20R8

Allen-Bradley Beacon Xenon Mini Square Strobe 5J 240V AC Yellow

BEACONS

DIMENSIONAL DIAGRAM

Dimensions are in millimeters (inches).

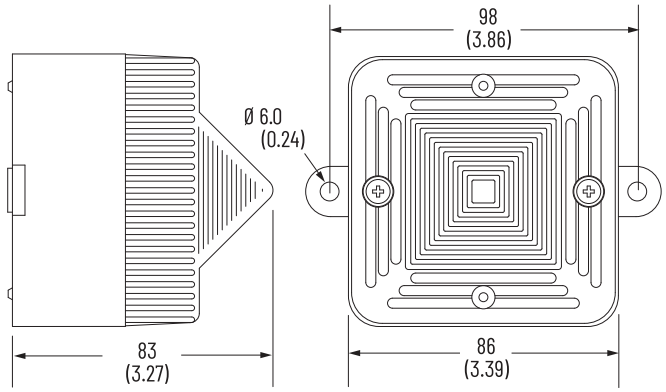

Published on 06 November 2026