48250403

Socomec DIRIS A-30 Multifunction Base Meter

MULTIFUNCTION METERS

Component type	Multifunction energy meter
Range	DIRIS A-30
Model	N/A
Product status	Existing

The DIRIS A-30 is a high-accuracy modular multifunction meter with user-friendly installation and troubleshooting features, including wiring error detection. Its modularity allows for flexibility and adaptability throughout its service life.

ELECTRICAL	Power consumption	10 W
	Pulse counter	Yes
	Self-powered	No
	Pole type	Three conductor/four conductor
	Measurement parameter kW	Yes
	Measurement parameter kWh	Yes
	Measurement parameter kVAR	Yes
	Measurement parameter kVARh	Yes
	Measurement parameter PF	Yes
	Measurement parameter Hz	Yes
	Measurement parameter VL-L	Yes
	Measurement parameter VL-N	Yes
COMMUNICATION	Supporting protocol for Modbus	Yes
CONSTRUCTION	Terminal type	Removable terminal block
	Mounting method	To panel
	Degree of protection (IP), front side	IP52
DIMENSIONS	Height	96 mm
	Width	96 mm
	Depth	60 mm
ENVIRONMENT	Operating temperature	-10…55 °C
	Storage temperature	-20…85 °C

Published on 02 August 2026

MULTIFUNCTION METERS

DIMENSIONAL DIAGRAM

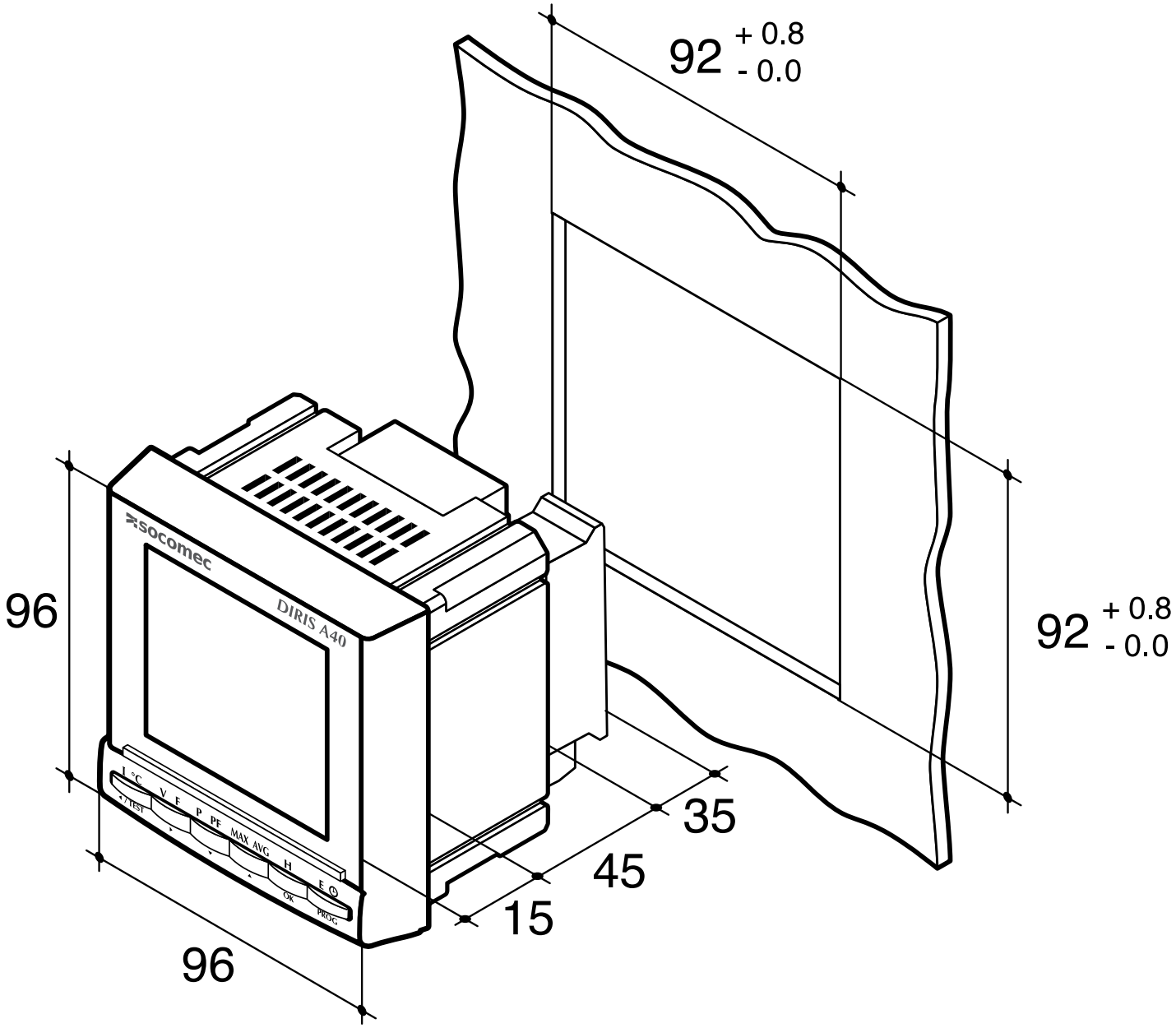

ELECTRICAL CONNECTION DIAGRAM

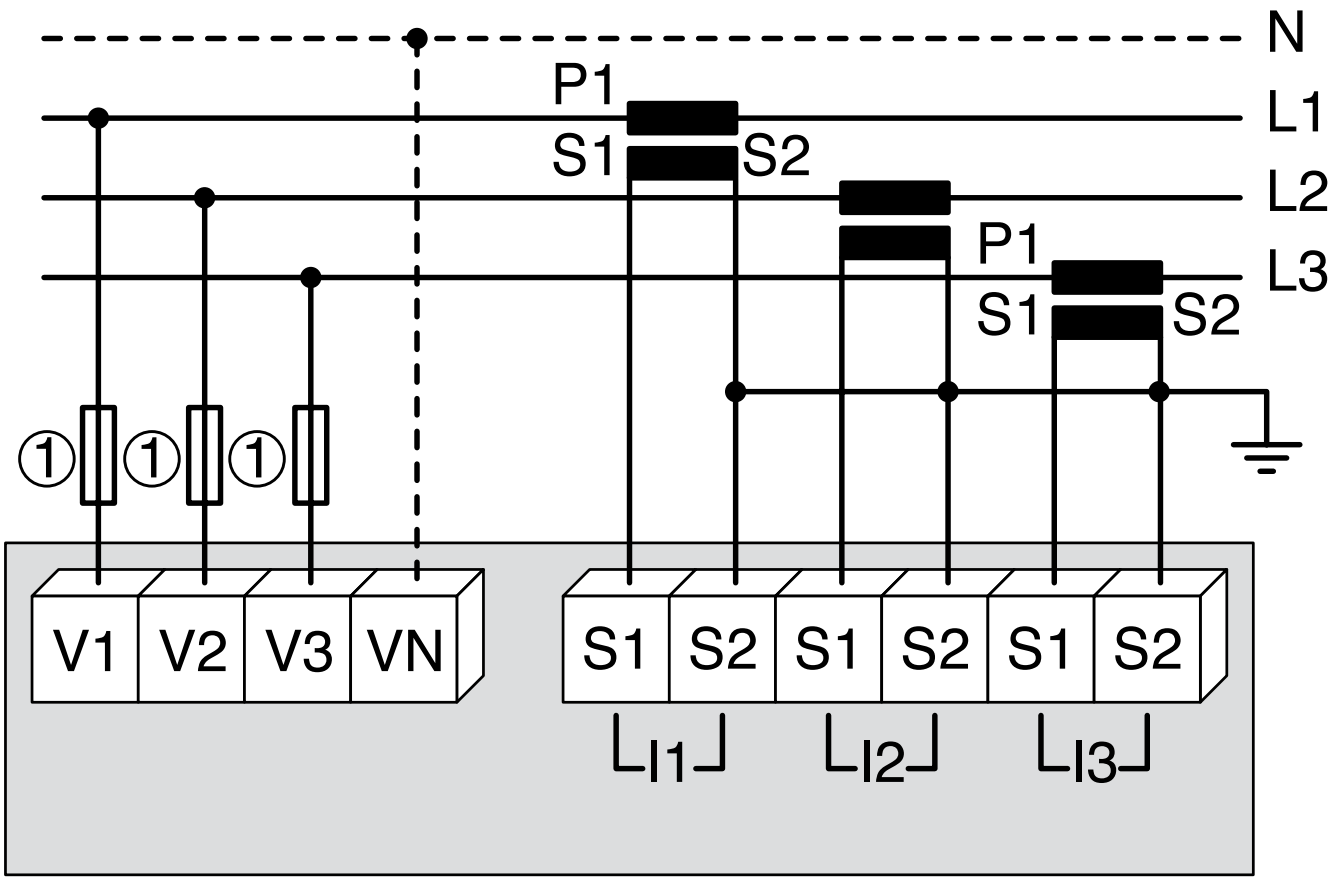

1. 0.5 A gG/ 0.5A class CC fuses

RELATED PRODUCTS

ACCESSORY

Item No: 48250089
Required: No
Description: Socomec ATyS Cover, IP 54, suits ATyS D10/20 Display

Item No: 48250090
Required: No
Description: Socomec Diris A-30/41/ ATyS P 2 Pulse Outputs Plugin Module

Item No: 48250092
Required: No
Description: Socomec Diris A-30/41/ ATyS P RS485 Modbus Communication Plugin Module

Item No: 48250093
Required: No
Description: Socomec Diris A-30/41/ ATyS P 2 Analogue Outputs 0/4-20mA Plugin Module

Item No: 48250094
Required: No
Description: Socomec Diris A-30/41/ ATyS P 2 Programmable Digital Inputs and 2 Relay Outputs Plugin Module

Item No: 48250097
Required: No
Description: Socomec DIRIS A-30/41 Memory Plugin Module

Item No: 48250203
Required: No
Description: Socomec Diris A-30/41/ ATyS P Ethernet (Modbus TCP) Communication Plugin Module

Item No: 48250204
Required: No
Description: Socomec Diris A-30/41 RS485 Modbus to Ethernet (Modbus TCP) Gateway Plugin module

Item No: 48250206
Required: No
Description: Socomec DIRIS A-30/41 Plugin Module Temperature Monitoring with PT100

Item No: 48250208
Required: No
Description: Socomec PT100 Sensor M6 Screw For A30/41 with Temperature Module

Item No: 48250209
Required: No
Description: Socomec PT100 Sensor M6 Lug For A30/41 with Temperature Module