# 3PS9D1NE01P

**PROCONECT 3PS125 Socket Outlet, 1P+N+E+2p, 150A (AC23 100A) 250V AC**

ISOLATING PLUGS

PROCONECT®

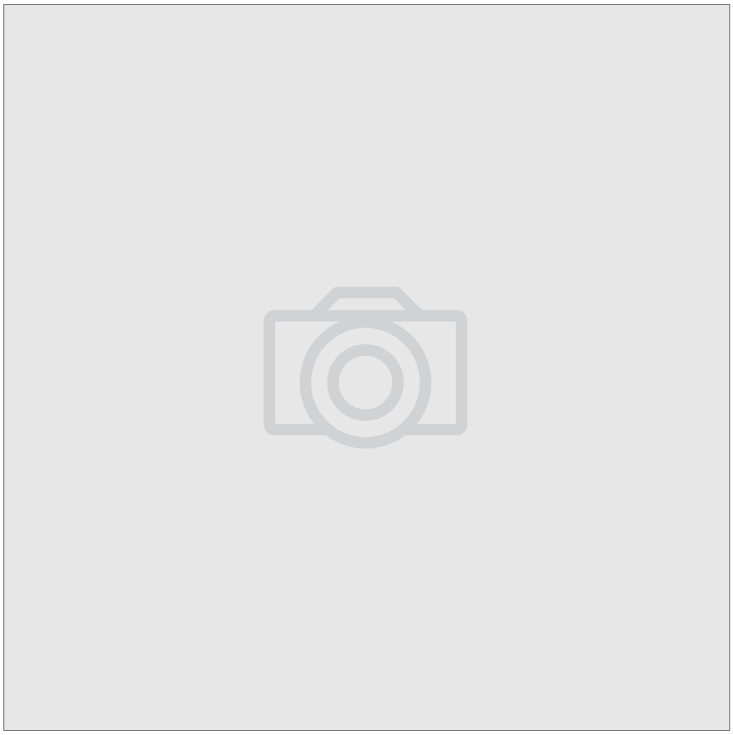

| | |
|---|---|
| **Component type** | Round socket/plug for high currents |
| **Range** | 3PS |
| **Model** | N/A |
| **Product status** | Existing |

Recognised as a leading provider of industrial plugs and sockets for mining, food processing, commercial, rail and marine industries, the 3PS isolating plugs and sockets from Proconect are available in five sizes: 30A, 50A, 90A, 150A and 250A, tested against IEC 60309-1 standard. The isolating plugs and sockets eliminate the need for a switch and ensures power is safely available when required.

| | | |
|---|---|---|
| **ELECTRICAL** | Amperage | 150 A |
| | Voltage | 220-240 V |
| | Contact configuration | 1P+N+E+2P |
| **CONSTRUCTION** | Construction type | Outlet |
| | Material insulation body | Polyamide (PA) |
| | Contact material | Other |
| | Material screw | Stainless steel |
| | IP rating | IP66 |
| **MECHANICAL** | Nominal tightening torque | 6 Nm |
| **DIMENSIONS** | Length | 146 mm |
| | Weight | 1.5 kg |
| **ENVIRONMENT** | Operating temperature | -30…60 °C |





Published on 02 November 2026

# 3PS9D1NE01P

**PROCONECT 3PS125 Socket Outlet, 1P+N+E+2p, 150A (AC23 100A) 250V AC**

ISOLATING PLUGS

PROCONECT®

## DIMENSIONAL DIAGRAM

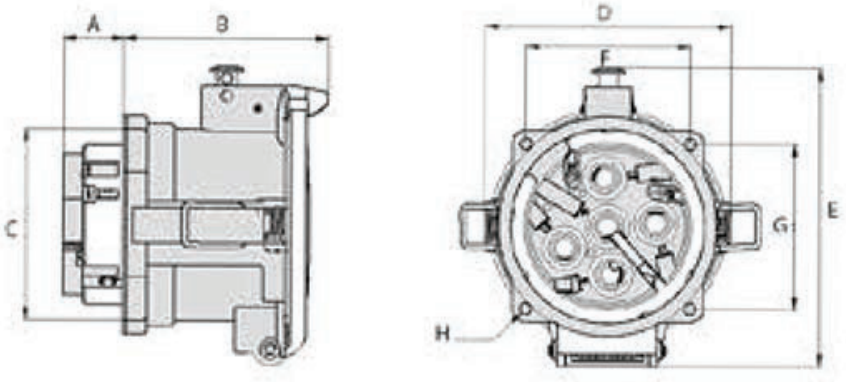


| Series | A | B | C θ | D | E | F | G | H θ | Kg |
|---|---|---|---|---|---|---|---|---|---|
| **3PS16** | 13 | 71 | 57 | 72 | 97.5 | 48 | 48 | 4.5 | 0.24 |
| **3PS32** | 16.5 | 77 | 69 | 82 | 107.5 | 55 | 55 | 4.5 | 0.38 |
| **3PS63** | 25 | 89.5 | 80 | 100 | 123.5 | 66 | 66 | 5.5 | 0.64 |
| **3PS125** | 24 | 122 | 99.5 | 129.2 | 145 | 81 | 81 | 6 | 1.50 |
| **3PS200** | 36 | 122 | 116 | 146 | 177 | 98 | 98 | 6.8 | 2.40 |

## RELATED PRODUCTS

### ACCESSORY



**Item No:** 3PS9G

**Required:** No

**Description:** PROCONECT 3PS125 Handle - Straight, suits 22-39mm cable



**Item No:** 3PS9LB

**Required:** No

**Description:** PROCONECT 3PS125 Incline Sleeve - Angled (60 degrees)



**Item No:** 3PS9PC

**Required:** No

**Description:** PROCONECT 3PS125 Appliance Inlet, Plug Cap



**Item No:** 3PS9WAS

**Required:** No

**Description:** PROCONECT 3PS125 Wall Box - Angled (60 degrees), M50x1.5mm Entry

**Item No:** 3PSBFR

**Required:** No

**Description:** PROCONECT 3PS125 Locking Levers





Published on 02 November 2026