3PS2D3NE01P

PROCONECT 3PS200 Socket Outlet, 3P+N+E+2p, 250A (AC23 160A) 440V AC

ISOLATING PLUGS

PROCONECT®



Component type	Round socket/plug for high currents
Range	3PS
Model	N/A
Product status	Existing

Recognised as a leading provider of industrial plugs and sockets for mining, food processing, commercial, rail and marine industries, the 3PS isolating plugs and sockets from Proconect are available in five sizes: 30A, 50A, 90A, 150A and 250A, tested against IEC 60309-1 standard. The isolating plugs and sockets eliminate the need for a switch and ensures power is safely available when required.

ELECTRICAL	Amperage	250 A
	Voltage	380-440 V
	Contact configuration	3P+N+E+2P
CONSTRUCTION	Construction type	Outlet
	Material insulation body	Other
	Contact material	Other
	Material screw	Stainless steel
	IP rating	IP66
MECHANICAL	Nominal tightening torque	10 Nm
DIMENSIONS	Length	158 mm
	Weight	2.4 kg
ENVIRONMENT	Operating temperature	-30…60 °C

Published on 02 November 2026

3PS2D3NE01P

PROCONECT 3PS200 Socket Outlet, 3P+N+E+2p, 250A (AC23 160A) 440V AC

ISOLATING PLUGS

PROCONECT®

DIMENSIONAL DIAGRAM

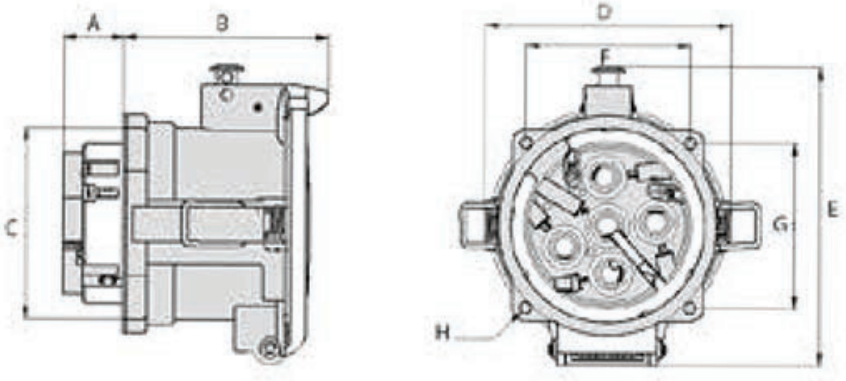

Series	A	B	C θ	D	E	F	G	H θ	Kg
3PS16	13	71	57	72	97.5	48	48	4.5	0.24
3PS32	16.5	77	69	82	107.5	55	55	4.5	0.38
3PS63	25	89.5	80	100	123.5	66	66	5.5	0.64
3PS125	24	122	99.5	129.2	145	81	81	6	1.50
3PS200	36	122	116	146	177	98	98	6.8	2.40

RELATED PRODUCTS

ACCESSORY



Item No: 3PS2G
Required: No
Description: PROCONECT 3PS200 Handle - Straight, suits 22-50mm cable



Item No: 3PS2LB
Required: No
Description: PROCONECT 3PS200 Incline Sleeve - Angled (60 degrees)



Item No: 3PS2PC
Required: No
Description: PROCONECT 3PS200 Appliance Inlet, Plug Cap



Item No: 3PS2WAS
Required: No
Description: PROCONECT 3PS200 Wall Box - Angled (60 degrees), M63x1.5mm Entry

Item No: 3PSBFR
Required: No
Description: PROCONECT 3PS125 Locking Levers

Published on 02 November 2026