28402001

STEGO Pressure Compensation Device 303 Stainless M12 IP66
Qty 1

PRESSURE AND DRAINAGE VALVES



Component type	Condensate drain (enclosure/cabinet)
Range	Pressure Compensation / Drainage
Model	N/A
Product status	Existing

The Stego Pressure Compensation Devices are available in several sizes and materials and are fast and easy to install to achieve AS3000:2018 Clause 1.7.2 compliance. The one-way membrane allows moisture to escape the enclosure, while keeping liquid and dust out. Manufactured in Germany, they offer long service life with minimal maintenance.

CONSTRUCTION	**Air permeability**	120 l/h
	Material	Stainless steel
	IP rating	IP66
	Colour	Light grey
MECHANICAL	**Thread size**	M12 x 1.5
	Nominal tightening torque	5 Nm
	Max. tightening torque	10 Nm
DIMENSIONS	**Diameter mounting hole**	12.1 mm
	Weight	0.02 kg
	Depth	31 mm
ENVIRONMENT	**Operating temperature**	-45…80 °C
	Storage temperature	-45…80 °C

Published on 08 September 2026

28402001

STEGO Pressure Compensation Device 303 Stainless M12 IP66
Qty 1

PRESSURE AND DRAINAGE VALVES

DIMENSIONAL DIAGRAM

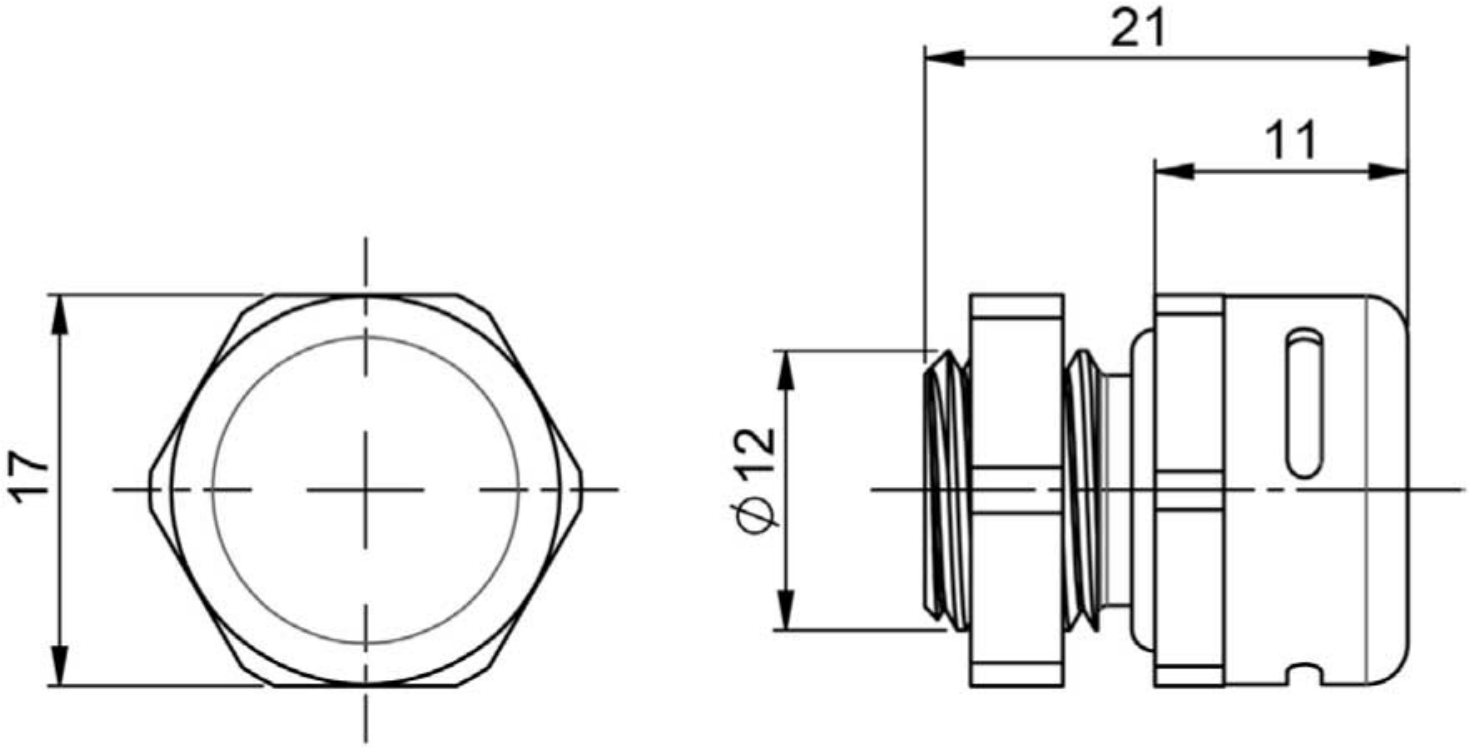

Published on 08 September 2026