# 1718OB2

**Allen-Bradley 1718 Ex I/O 2-Point Digital Output Module 23V**

IN CABINET DISTRIBUTED IO




| | |
|---|---|
| **Component type** | Fieldbus, decentr. periphery - analogue/digital I/O module |
| **Range** | Ex I/O |
| **Model** | N/A |
| **Product status** | Existing |

The Allen-Bradley Ex I/O modules are an intrinsically safe distributed I/O platform that can be mounted in either Zone 1 or 2, Class I or Div 2 hazardous areas. It integrates devices via EtherNet/IP™ in a chassis-based I/O design reducing the need for additional hardware and wiring. Allowing flexible configuration options ranging from 10 to 40-slot and covered by bulletin numbers 1718 and 1719.

| | | |
|---|---|---|
| **CONSTRUCTION** | Suitable for safety functions | No |
| | Number of digital outputs | 2 |
| **DIMENSIONS** | Width | 28 mm |
| | Height | 107 mm |
| | Depth | 132 mm |
| **ENVIRONMENT** | Operating temperature | -20…60 °C |
| | Storage temperature | -25…85 °C |
| | Max. ambient humidity (non-condensing) | 95 % |



Published on 06 October 2026

# 1718OB2

**Allen-Bradley 1718 Ex I/O 2-Point Digital Output Module 23V**

IN CABINET DISTRIBUTED IO

## DIMENSIONAL DIAGRAM

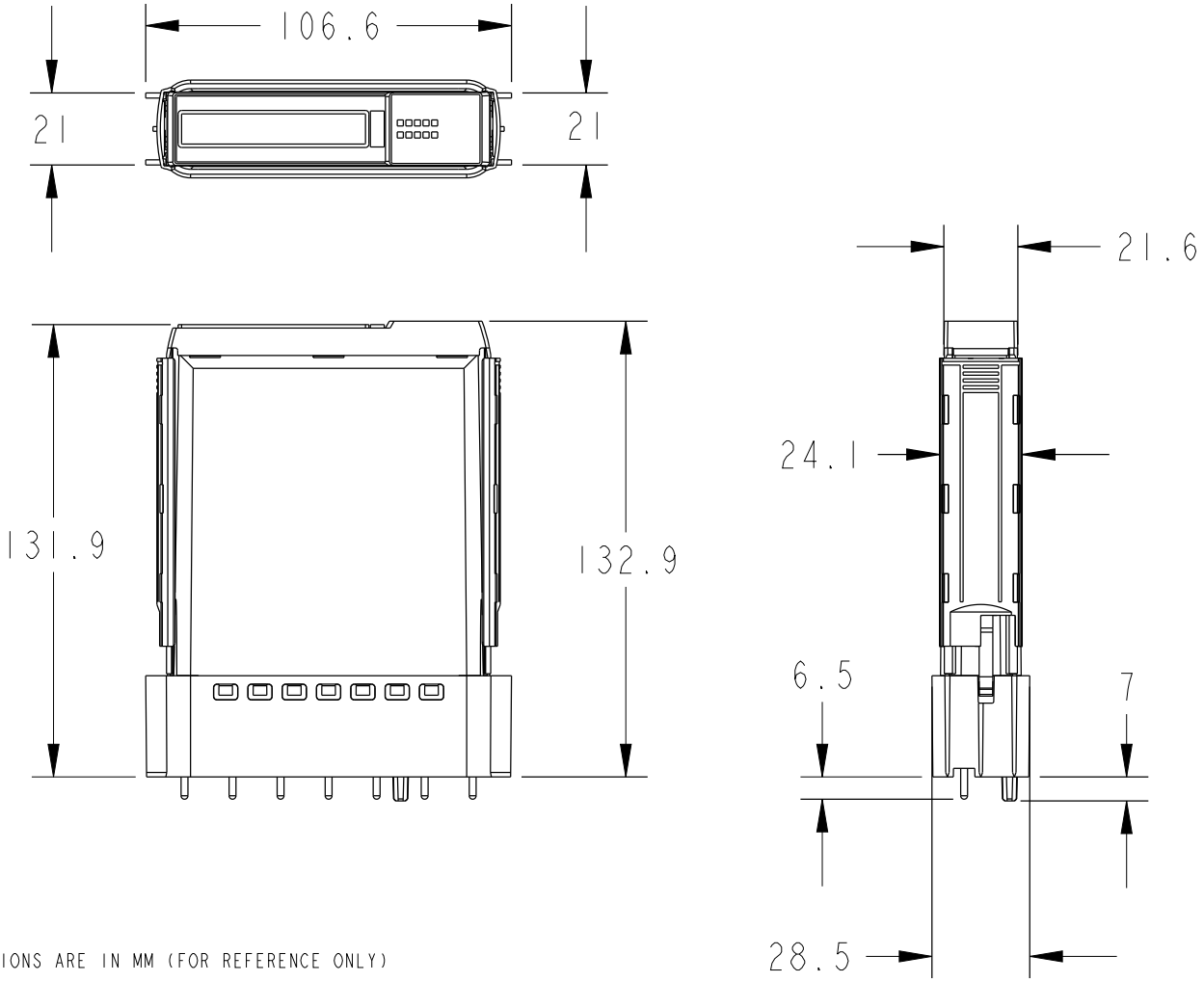


NOTE:

ALL DIMENSIONS ARE IN MM (FOR REFERENCE ONLY)

## RELATED PRODUCTS

### ACCESSORY



**Item No:** 1719TB6
**Required:** No
**Description:** Allen-Bradley 1719 Ex I/O Screw Terminal 6P



**Item No:** 1719TB6S
**Required:** No
**Description:** Allen-Bradley 1719 Ex I/O Spring Terminal 6P



**Item No:** 1719TB6F
**Required:** No
**Description:** Allen-Bradley 1719 Ex I/O Front Screw Terminal 6P



**Item No:** 1719TB8
**Required:** No
**Description:** Allen-Bradley 1719 Ex I/O Screw Terminal 8P



Published on 06 October 2026

## RELATED PRODUCTS

### ACCESSORY



**Item No:** 1719TB8F

**Required:** No

**Description:** Allen-Bradley 1719 Ex I/O Front Screw Terminal 8P



**Item No:** 1719TB8S

**Required:** No

**Description:** Allen-Bradley 1719 Ex I/O Spring Terminal 8P



**Item No:** 1719TB8SX2

**Required:** No

**Description:** Allen-Bradley 1719 Ex I/O Spring Terminal 2 x 8P



**Item No:** 1719TB8X2

**Required:** No

**Description:** Allen-Bradley 1719 Ex I/O Screw Terminal 2 x 8P

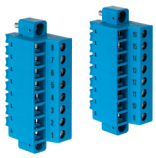

**Item No:** 1719TB8X2F

**Required:** No

**Description:** Allen-Bradley 1719 Ex I/O Front Screw Terminal 2 x 8P

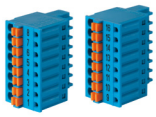

**Item No:** 1719TB8X2SA

**Required:** No

**Description:** Allen-Bradley 1719 Ex I/O Spring Terminal 2 x 8P for 1719-IBN8