1492PD32PC

Allen-Bradley 1492-P Push-in Plug-in Type Terminal 2.5mm 2 Levels Connected 4 Conductor Entries Grey

TERMINALS

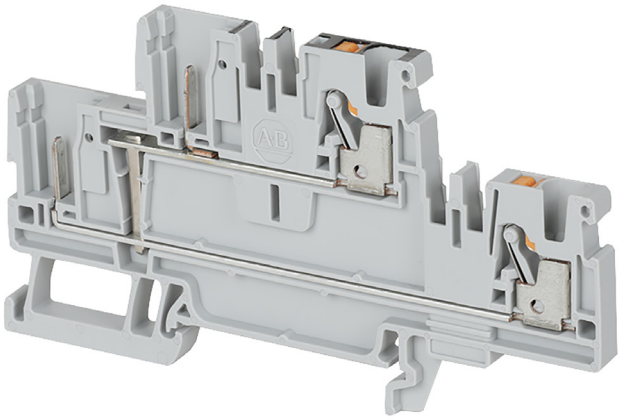

Component type	Feed-through terminal block
Range	1492P
Model	N/A
Product status	Existing

The Allen-Bradley 1492-P range of Push-in Terminal Blocks are reliable, safe and straightforward electrical connections designed for advanced wiring management. With cross-sectional wire sizes from 1.5mm2 to 16mm2 and various terminal types such as feed-through, disconnect, fused and plug-in. Available in single and multi-level housing with a wide range of accessories enabling quick installation.

ELECTRICAL	**Type of electrical connection 1**	Push-in clamp connection
	Rated current In	24 A
	Rated voltage	800 V
CONSTRUCTION	**Colour**	Grey
	Package quantity	50
	Mounting method	DIN rail (top hat rail) 35 mm
DIMENSIONS	**Wire/conductor size**	0.5-2.5 mm
	Width	5.1 mm
	Height	91 mm
	Depth	50.5 mm

RELATED PRODUCTS

ACCESSORY



Item No: 1492CJP310
Required: No
Description: Allen-Bradley 1492-P Centre Jumper Orange 10 Pole for 2.5mm Push-in Terminal



Item No: 1492CJP32
Required: No
Description: Allen-Bradley 1492-P Centre Jumper Orange 2 Pole for 2.5mm Push-in Terminal



Item No: 1492CJP320
Required: No
Description: Allen-Bradley 1492-P Centre Jumper Orange 20 Pole for 2.5mm Push In Terminal



Item No: 1492CJP33
Required: No
Description: Allen-Bradley 1492-P Centre Jumper Orange 3 Pole for 2.5mm Push-in Terminal

Published on 14 October 2026

1492PD32PC

Allen-Bradley 1492-P Push-in Plug-in Type Terminal 2.5mm 2 Levels Connected 4 Conductor Entries Grey

TERMINALS

RELATED PRODUCTS

ACCESSORY



Item No: 1492CJP34
Required: No
Description: Allen-Bradley 1492-P Centre Jumper Orange 4 Pole for 2.5mm Push-in Terminal



Item No: 1492CJP35
Required: No
Description: Allen-Bradley 1492-P Centre Jumper Orange 5 Pole for 2.5mm Push-in Terminal



Item No: 1492CJP350
Required: No
Description: Allen-Bradley 1492-P Centre Jumper Orange 50 Pole for 2.5mm Push-in Terminal



Item No: 1492CJP36
Required: No
Description: Allen-Bradley 1492-P Centre Jumper Orange 6 Pole for 2.5mm Push-in Terminal



Item No: 1492CJP37
Required: No
Description: Allen-Bradley 1492-P Centre Jumper Orange 7 Pole for 2.5mm Push-in Terminal



Item No: 1492CJP39
Required: No
Description: Allen-Bradley 1492-P Centre Jumper Orange 9 Pole for 2.5mm Push-in Terminal



Item No: 1492DR5
Required: No
Description: Allen-Bradley 1492 DIN Rail 35 x 7.5mm Copper Free Aluminium 1m



Item No: 1492EAHJ35
Required: No
Description: Allen-Bradley 1492-J Heavy Duty End Anchor for 1492 J

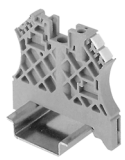

Item No: 1492EAJ35
Required: No
Description: Allen-Bradley 1492-J End Anchor for 1492 J



Item No: 1492EAP35
Required: No
Description: Allen-Bradley 1492-P End Anchor Screw Standard Duty Grey



Item No: 1492EBPD3
Required: No
Description: Allen-Bradley 1492-P End Plate Grey for Push-in Terminal 1492PD3



Item No: 1492EBPD3B
Required: No
Description: Allen-Bradley 1492-P End Plate Blue for Push-in Terminal 1492PD3



Item No: 1492ERL35
Required: No
Description: Allen-Bradley 1492 End Anchor

Item No: 1492MR5X8
Required: No
Description: Allen-Bradley 1492-M Marker Card Snap In 5 x 8mm Linked 120 Tags No Text

Item No: 1492MT5X8
Required: No
Description: Allen-Bradley 1492-M Marker Card Snap In 5 x 8mm 800 Markers Per Roll



Item No: 1492P3ESTP
Required: No
Description: Allen-Bradley 1492-P Flexible Plug-in End Plug for Push-in 2.5mm Terminal Block Grey



Item No: 1492P3ESTPB
Required: No
Description: Allen-Bradley 1492-P Flexible Plug-in End Plug for Push-in 2.5mm Terminal Block Blue



Item No: 1492P3ESTPG
Required: No
Description: Allen-Bradley 1492-P Flexible Plug-in End Plug for Push-in 2.5mm Terminal Block Green

Published on 14 October 2026

1492PD32PC

Allen-Bradley 1492-P Push-in Plug-in Type Terminal 2.5mm 2 Levels Connected 4 Conductor Entries Grey

TERMINALS

RELATED PRODUCTS

ACCESSORY



Item No: 1492P3MSTP

Required: No

Description: Allen-Bradley 1492-P Middle Flexible Plug for Push-in 2.5mm Terminal Block Grey



Item No: 1492P3MSTPB

Required: No

Description: Allen-Bradley 1492-P Middle Flexible Plug for Push-in 2.5mm Terminal Block Blue

Item No: 1492P3MSTPG

Required: No

Description: Allen-Bradley 1492-P Middle Flexible Plug for Push-in 2.5mm Terminal Block Green



Item No: 1492P3SSTP

Required: No

Description: Allen-Bradley 1492-P Start Flexible Plug for Push-in 2.5mm Terminal Block Grey



Item No: 1492P3SSTPB

Required: No

Description: Allen-Bradley 1492-P Start Flexible Plug for Push-in 2.5mm Terminal Block Blue



Item No: 1492P3SSTPG

Required: No

Description: Allen-Bradley 1492-P Start Flexible Plug for Push-in 2.5mm Terminal Block Green



Item No: 1492P3STPCE

Required: No

Description: Allen-Bradley 1492-P Flexible Plug-in Accessory 2.5mm Coding Element Grey



Item No: 1492P3STPEB

Required: No

Description: Allen-Bradley 1492-P Flexible Plug-in Accessory 2.5mm End Barrier Grey

Item No: 1492P3STPPC

Required: No

Description: Allen-Bradley 1492-P Flexible Plug-in Accessory 2.5mm Plug Cover