1492P6

Allen-Bradley 1492-P Push-in Terminal 6mm 1 Level 2 Conductor Entries Grey

TERMINALS

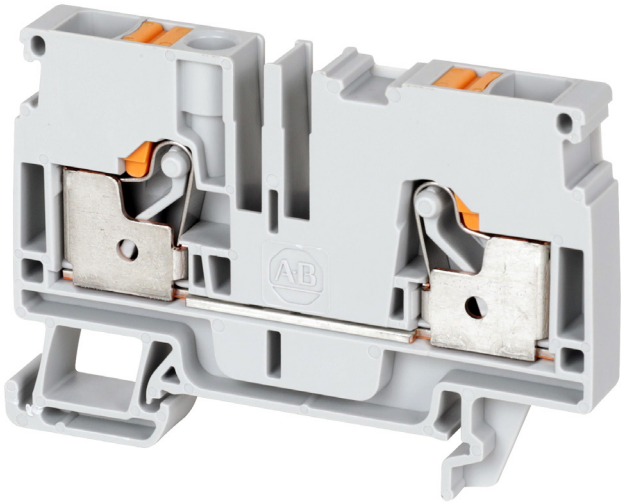

Component type	Feed-through terminal block
Range	1492P
Model	N/A
Product status	Existing

The Allen-Bradley 1492-P range of Push-in Terminal Blocks are reliable, safe and straightforward electrical connections designed for advanced wiring management. With cross-sectional wire sizes from 1.5mm2 to 16mm2 and various terminal types such as feed-through, disconnect, fused and plug-in. Available in single and multi-level housing with a wide range of accessories enabling quick installation.

ELECTRICAL	**Type of electrical connection 1**	Push-in clamp connection
	Rated current In	41 A
	Rated voltage	800 V
CONSTRUCTION	**Colour**	Grey
	Package quantity	50
	Mounting method	DIN rail (top hat rail) 35 mm
DIMENSIONS	**Wire/conductor size**	0.5-6 mm
	Width	8.1 mm
	Height	66.5 mm
	Depth	45.5 mm

Published on 14 October 2026

1492P6

Allen-Bradley 1492-P Push-in Terminal 6mm 1 Level 2 Conductor Entries Grey

TERMINALS

DIMENSIONAL DIAGRAM

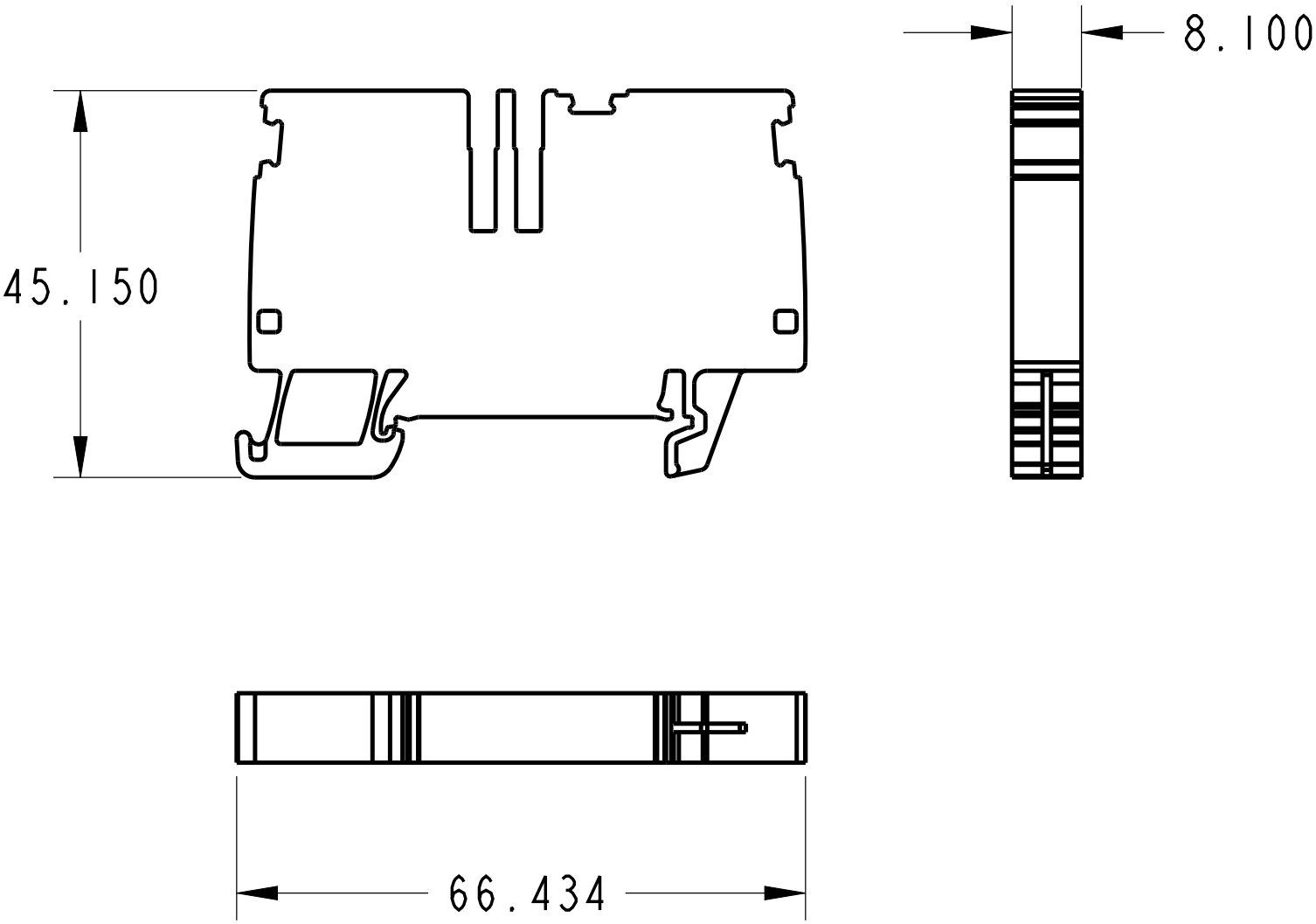

RELATED PRODUCTS

ACCESSORY



Item No: 1492CJP62

Required: No

Description: Allen-Bradley 1492-P Centre Jumper Orange 2 Pole for 6mm Push-in Terminal



Item No: 1492CJP63

Required: No

Description: Allen-Bradley 1492-P Centre Jumper Orange 3 Pole for 6mm Push-in Terminal



Item No: 1492CJP64

Required: No

Description: Allen-Bradley 1492-P Centre Jumper Orange 4 Pole for 6mm Push-in Terminal

Item No: 1492DR5

Required: No

Description: Allen-Bradley 1492 DIN Rail 35 x 7.5mm Copper Free Aluminium 1m

Published on 14 October 2026

1492P6

Allen-Bradley 1492-P Push-in Terminal 6mm 1 Level 2 Conductor Entries Grey

TERMINALS

RELATED PRODUCTS

ACCESSORY



Item No: 1492EAHJ35
Required: No
Description: Allen-Bradley 1492-J Heavy Duty End Anchor for 1492 J



Item No: 1492EAJ35
Required: No
Description: Allen-Bradley 1492-J End Anchor for 1492 J



Item No: 1492EAP35
Required: No
Description: Allen-Bradley 1492-P End Anchor Screw Standard Duty Grey



Item No: 1492EBP6
Required: No
Description: Allen-Bradley 1492-P End Plate Grey for Push-in Terminal 1492P6



Item No: 1492EBP6B
Required: No
Description: Allen-Bradley 1492-P End Plate Blue for Push-in Terminal 1492P6



Item No: 1492ERL35
Required: No
Description: Allen-Bradley 1492 End Anchor

Item No: 1492MT8X8
Required: No
Description: Allen-Bradley 1492-M Marker Card Snap In 8 X 8mm 500 Markers Per Roll



Item No: 1492P6TPE
Required: No
Description: Allen-Bradley 1492-P Flexible Test Plug Accessory End Test Plug For 6mm Terminal Black



Item No: 1492PTPS
Required: No
Description: Allen-Bradley 1492-P Flexible Test Plug Accessory Start Test Plug Black

Published on 14 October 2026