1492J6RE

Allen-Bradley 1492-J Screw Connection Terminal 6mm 1 Level 2 Conductor Entries Red

TERMINALS

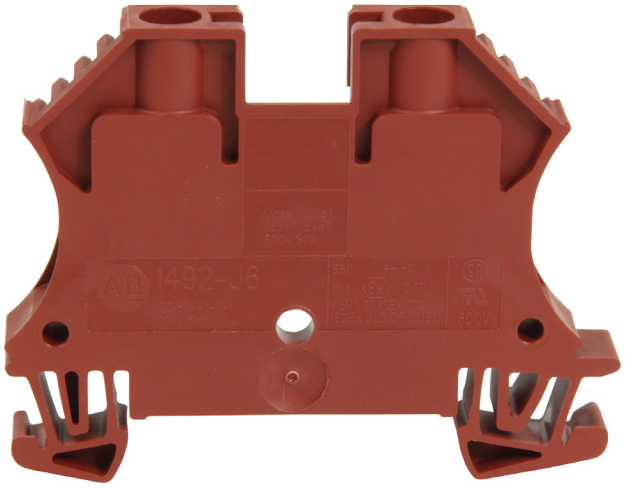

Component type	Feed-through terminal block
Range	1492J/W
Model	N/A
Product status	Existing

The Allen-Bradley 1492-J and W ranges of screw connection terminal blocks are reliable, safe and straight forward electrical connections for wiring management. With cross-sectional wire sizes from 0.5mm2 to 120mm2 and terminal types such as feed-through, disconnect, fused, plug-in and thermocouple. Options include single or multi-level housing and accessories for various panel space requirements.

ELECTRICAL	Type of electrical connection 1	Screw connection
	Rated current In	41 A
	Rated voltage	800 V
CONSTRUCTION	Number of levels	1
	Number of clamp positions per level	2
	Colour	Red
	Mounting method	DIN rail (top hat rail) 35 mm
MECHANICAL	Nominal tightening torque	1.6 Nm
DIMENSIONS	Wire/conductor size	0.5-6 mm
	Width	8.1 mm
	Height	60 mm
	Depth	39.5 mm
	Wire strip length	12 mm
ENVIRONMENT	Insulation temperature	-50…120 °C

Published on 07 October 2026

1492J6RE

Allen-Bradley 1492-J Screw Connection Terminal 6mm 1 Level 2 Conductor Entries Red

TERMINALS

DIMENSIONAL DIAGRAM

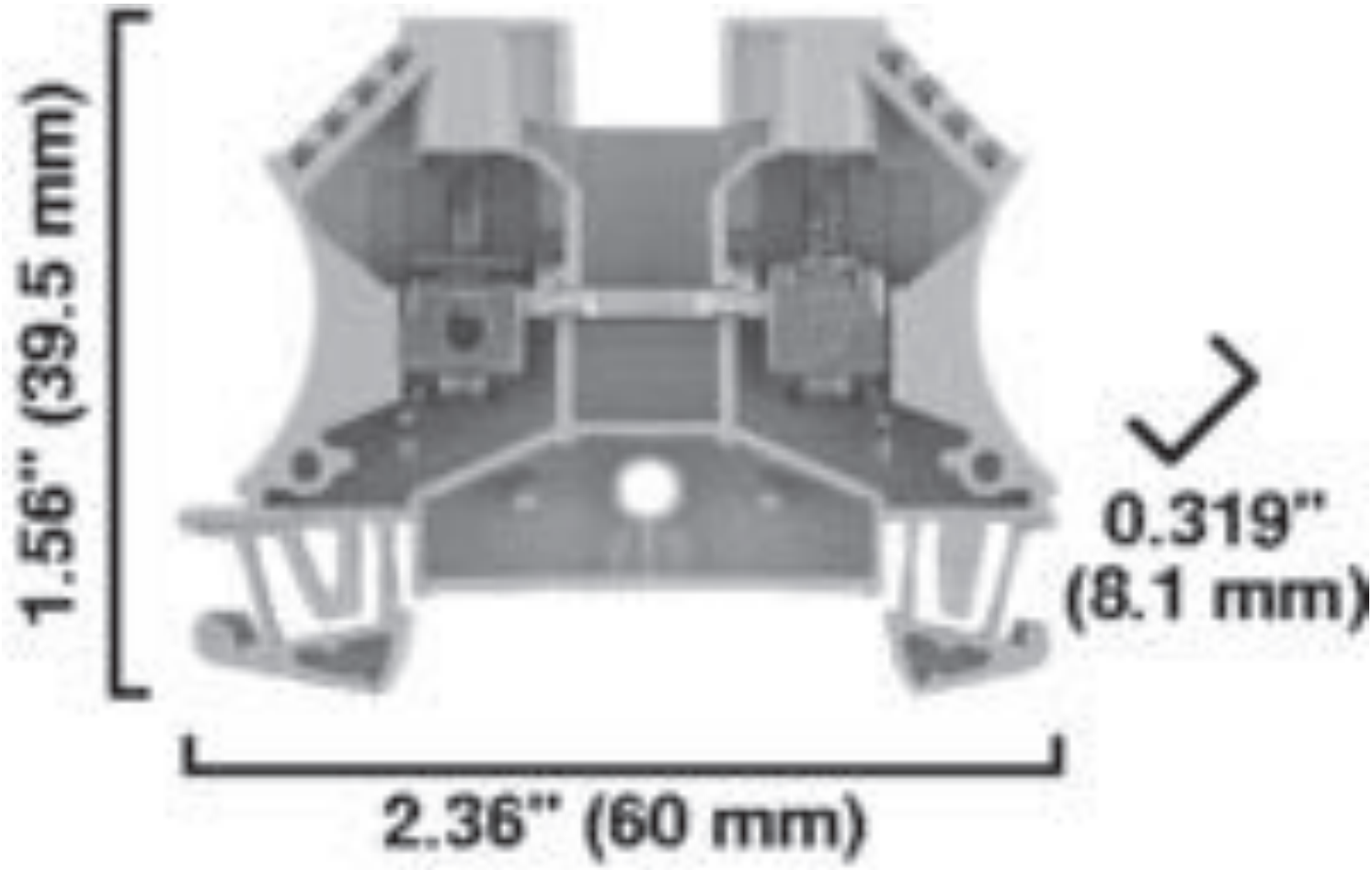

Published on 07 October 2026