1492DR9

Allen-Bradley 1492 DIN Rail 35 x 15mm Zinc Plated Steel 1m

TERMINALS

Component type	Mounting rail
Range	1492J/W
Model	N/A
Product status	Existing

The Allen-Bradley 1492-J and W ranges of screw connection terminal blocks are reliable, safe and straight forward electrical connections for wiring management. With cross-sectional wire sizes from 0.5mm2 to 120mm2 and terminal types such as feed-through, disconnect, fused, plug-in and thermocouple. Options include single or multi-level housing and accessories for various panel space requirements.

CONSTRUCTION	**Model**	DIN rail (top hat rail) 35/15 mm
	Material	Aluminium
	Surface protection	Galvanic/electrolytic zinc plated
DIMENSIONS	**Length**	1000 mm
	Height	35 mm

DIMENSIONAL DIAGRAM

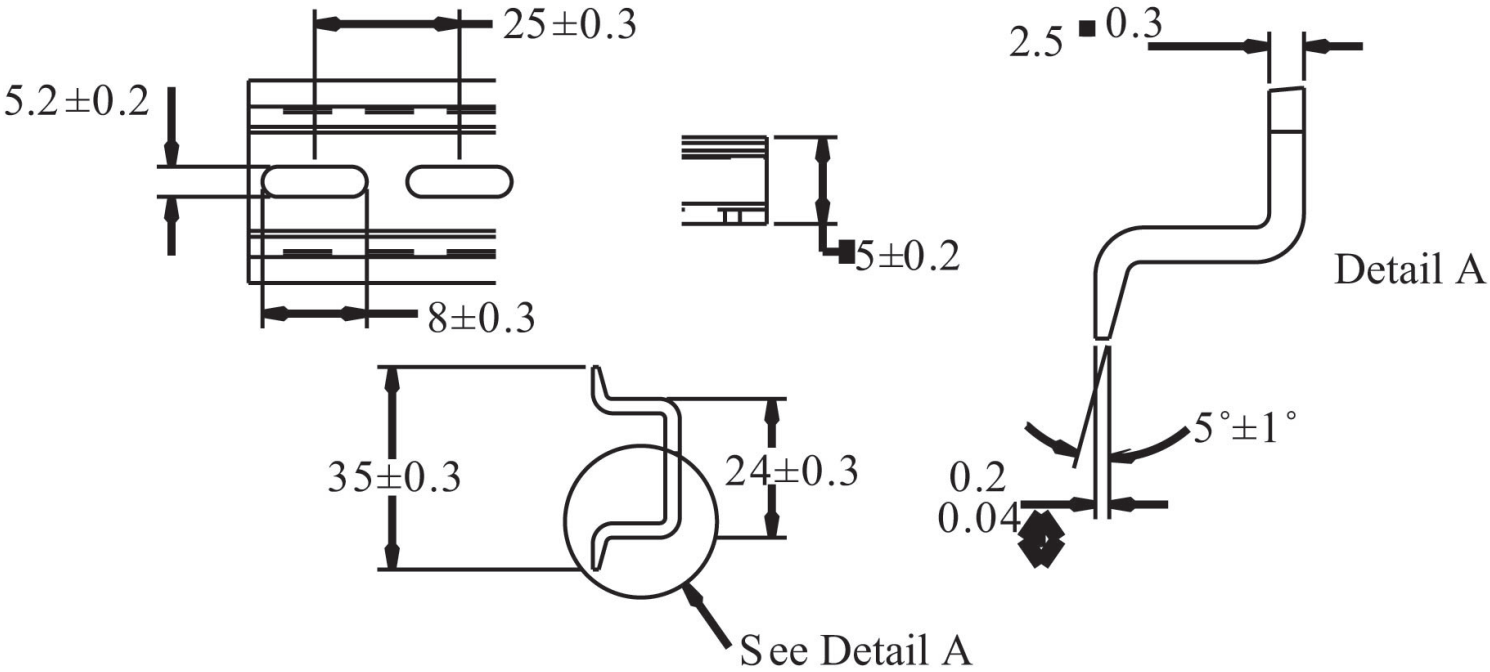

Published on 30 September 2026

RELATED PRODUCTS

ACCESSORY

Item No: 1492EAHJ35

Required: No

Description: Allen-Bradley 1492-J Heavy Duty End Anchor for 1492 J

Item No: 1492EAJ35

Required: No

Description: Allen-Bradley 1492-J End Anchor for 1492 J

Item No: 1492ERL35

Required: No

Description: Allen-Bradley 1492 End Anchor