569209

nVent ERIFLEX Distribution Blocks 1740A In 2 x 185 to 400mm Out 9 x 10 to 95mm Aluminium

TERMINALS AND DISTRIBUTION BLOCKS



Component type	Distributor assembly terminal blocks
Range	Distribution Block
Model	N/A
Product status	Existing

The nVent ERIFLEX range of distribution blocks are the ideal termination point between output and input devices. They come in a wide range of current ratings from 80A to 1740A and offer connection ratio with 1 or 2 inputs up to 12 outputs terminals. Terminals are tin plated to cater for copper or aluminium conductors offering IP2X touch protection.

ELECTRICAL	Number of poles	1
	Rated insulation voltage Ui	1000 V
	Short time withstand current Icw, 1 sec	84 kA
	Max. rated current	1250 A
CONSTRUCTION	Conductor material	Aluminium/copper
	With PE-rail	No
	With N-rail	No
DIMENSIONS	Conductor cross section (solid, stranded)	10-95 mm²
	Height	106 mm
	Width	71 mm
	Depth	195 mm

Published on 02 November 2026

DIMENSIONAL DIAGRAM

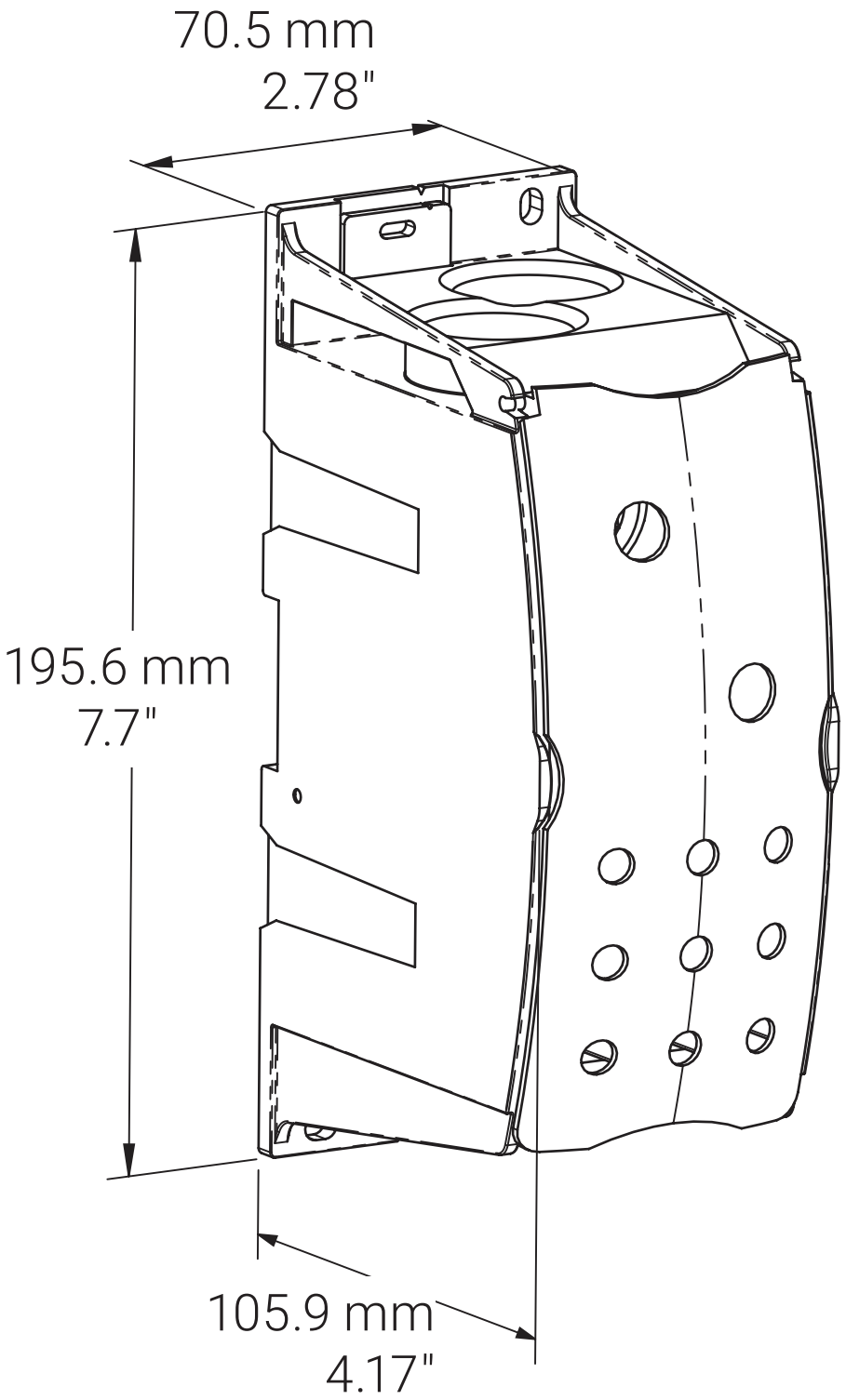

RELATED PRODUCTS

ACCESSORY



Item No: 561138

Required: No

Description: nVent ERIFLEX High Current Terminal End Clamp for DIN35 Mount or Panel Mount