ISOAI310PGLB

NHP ISO Appliance Inlet, 3 Flat Pins 10A 250V AC, w/o Base, Grey

ISO
INDUSTRIAL PLUGS AND SOCKETS



Component type	Appliance inlet according to AS/NZS 3112
Range	ISO
Model	N/A
Product status	Existing

The often overlooked essentials that are always indispensable. Choose from NHP's range of 400+ industrial, isolating and high-current plugs, sockets and switches available for a wide breadth of applications.

ELECTRICAL	Nominal voltage	250 V
	Rated current	10 A
	Number of phases	1
	With neutral conductor contact	Yes
CONSTRUCTION	Material	Plastic
	Colour	Grey
	Modular version	Yes
	With base	No
	IP rating	IP66
	Type of cover	Screwed
	Protective earth pin round	No
	Number of active pins (flat)	3
DIMENSIONS	Base depth	38 mm
	Height	101 mm
	Width	101 mm

Published on 29 June 2026

ISOAI310PGLB

NHP ISO Appliance Inlet, 3 Flat Pins 10A 250V AC, w/o Base, Grey

ISO
INDUSTRIAL PLUGS AND SOCKETS

DIMENSIONAL DIAGRAM

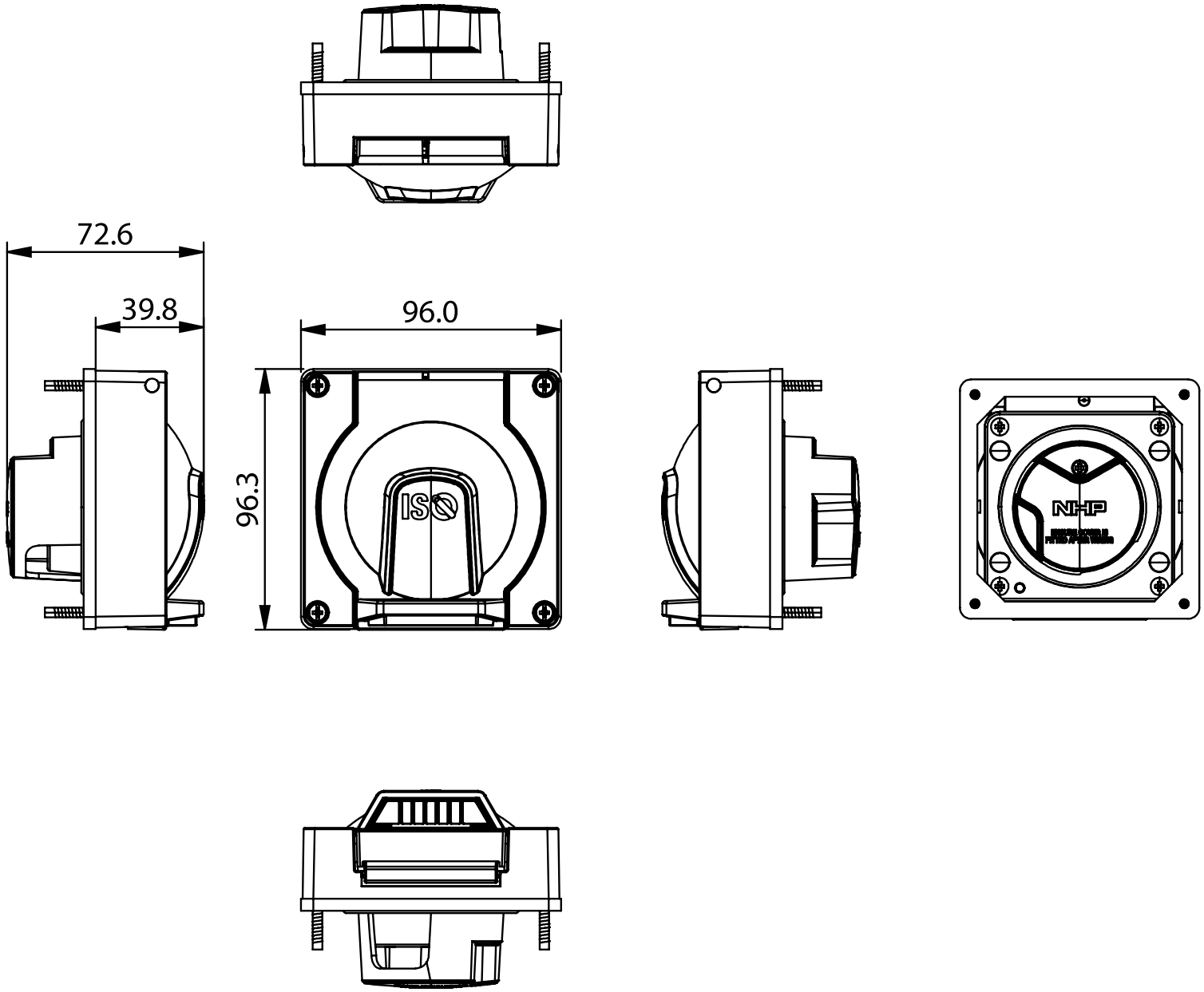

Published on 29 June 2026