ISOSO315PGLB

NHP ISO Socket Outlet, 3 Flat Pins 15A 250V AC, w/o Base, Grey

ISO
INDUSTRIAL PLUGS AND SOCKETS



Component type	Socket outlet according to AS/NZS 3112
Range	ISO
Model	N/A
Product status	Existing

The often overlooked essentials that are always indispensable. Choose from NHP's range of 400+ industrial, isolating and high-current plugs, sockets and switches available for a wide breadth of applications.

ELECTRICAL	Nominal voltage	250 V
	Rated current	15 A
CONSTRUCTION	Material	Polycarbonate (PC)
	Colour	Grey
	Protective earth pin round	No
	Number of active pins (flat)	3
	With base	No
	IP rating	IP66
	Resistant to chemicals	No
DIMENSIONS	Height	95 mm
	Width	101 mm
	Depth	42 mm

Published on 29 June 2026

ISOSO315PGLB

NHP ISO Socket Outlet, 3 Flat Pins 15A 250V AC, w/o Base, Grey

ISO
INDUSTRIAL PLUGS AND SOCKETS

DIMENSIONAL DIAGRAM

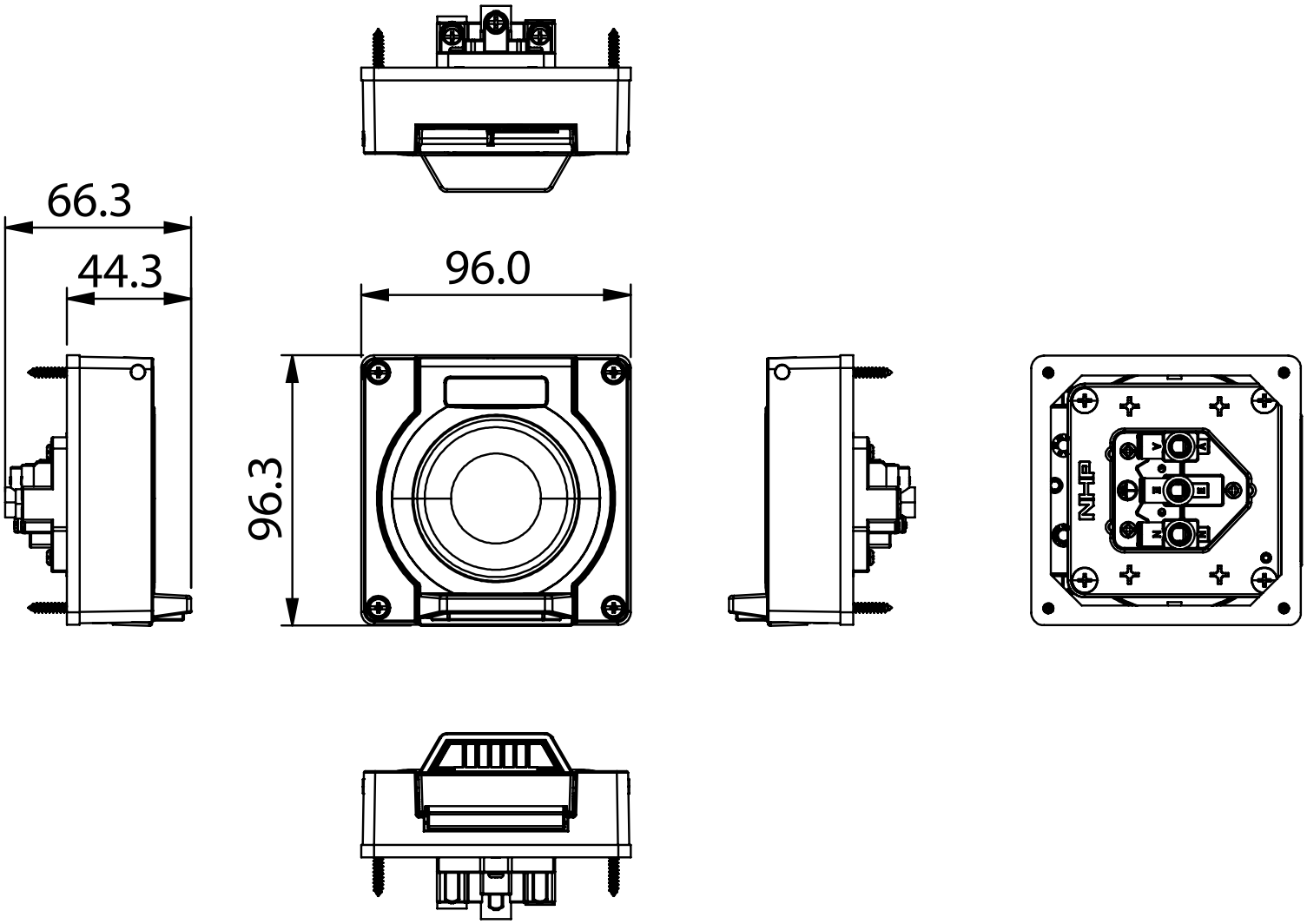

Published on 29 June 2026