700HNK41AZ24

Allen-Bradley 700-HN Miniature Timing Relay 1 CO Ultra Slim Multi function 0.1sec to 10min 24V DC

GENERAL PURPOSE RELAYS

Allen-Bradley

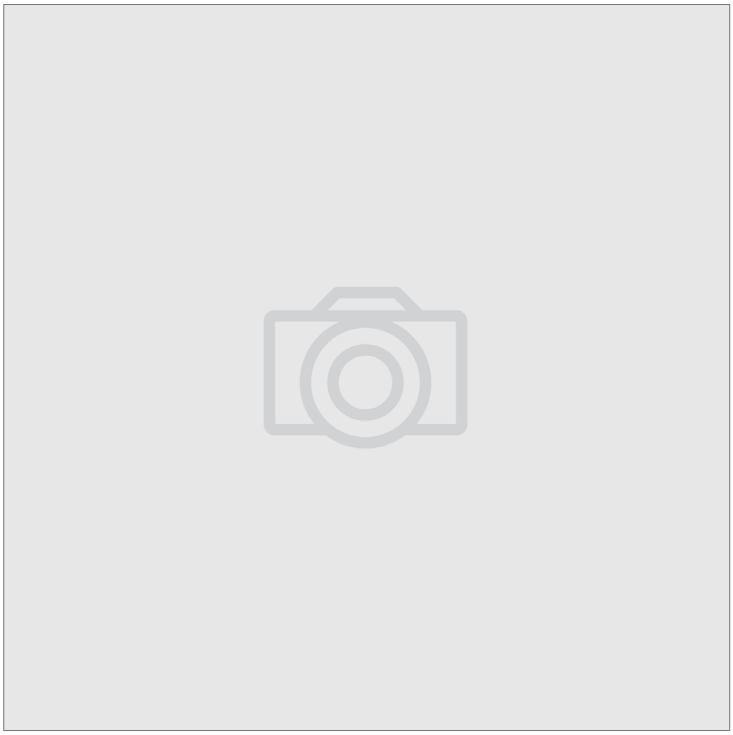

Component type	Timer relay
Range	Panel Mount and Power Relays
Model	N/A
Product status	Existing

ELECTRICAL	Voltage type for actuating	AC/DC
	Rated control supply voltage Us at DC	24 V
	Rated control supply voltage Us at AC 50HZ	24-240 V
	Number of outputs, delayed, change-over contact	1
	Nominal current	5 A
	Type of electric connection	Screw connection
	Function delay-on energization	No
	Function delay on de-energization	No
	Function floating contact on energization	No
	Function floating contact on de-energization	No
	Function star-delta	No
	Function pulse shaping	No
	Function flashing, starting with pause, fixed time	No
	Function flashing, starting with pulse, fixed time	No
	Clock function, starting with pause, variable	Yes
	Clock function, starting with pulse, variable	Yes
	Time range	0.5-600 s
	Time setting accuracy	5 %
	Rated power	0.5 W
	Power supply reset time	50 ms
	Power consumption	0.5 VA
	Electrical lifespan (control contacts)	200000 c (contacts)
CONSTRUCTION	Degree of protection (IP), front side	IP20
MECHANICAL	Suitable for DIN rail (top hat rail) mounting	Yes

Published on 16 April 2026

700HNK41AZ24

Allen-Bradley 700-HN Miniature Timing Relay 1 CO Ultra Slim Multi function 0.1sec to 10min 24V DC

GENERAL PURPOSE RELAYS

MECHANICAL	Mechanical lifetime (control contacts)	3.0E7 c (contacts)
	Max. shock acceleration	50 g
	Max. vibration acceleration	4 m/s²
	Max. vibration frequency, operational	100 Hz
DIMENSIONS	Height	80 mm
	Depth	109 mm
	Width	22.5 mm
ENVIRONMENT	Operating temperature	-25…45 °C

DIMENSIONAL DIAGRAM

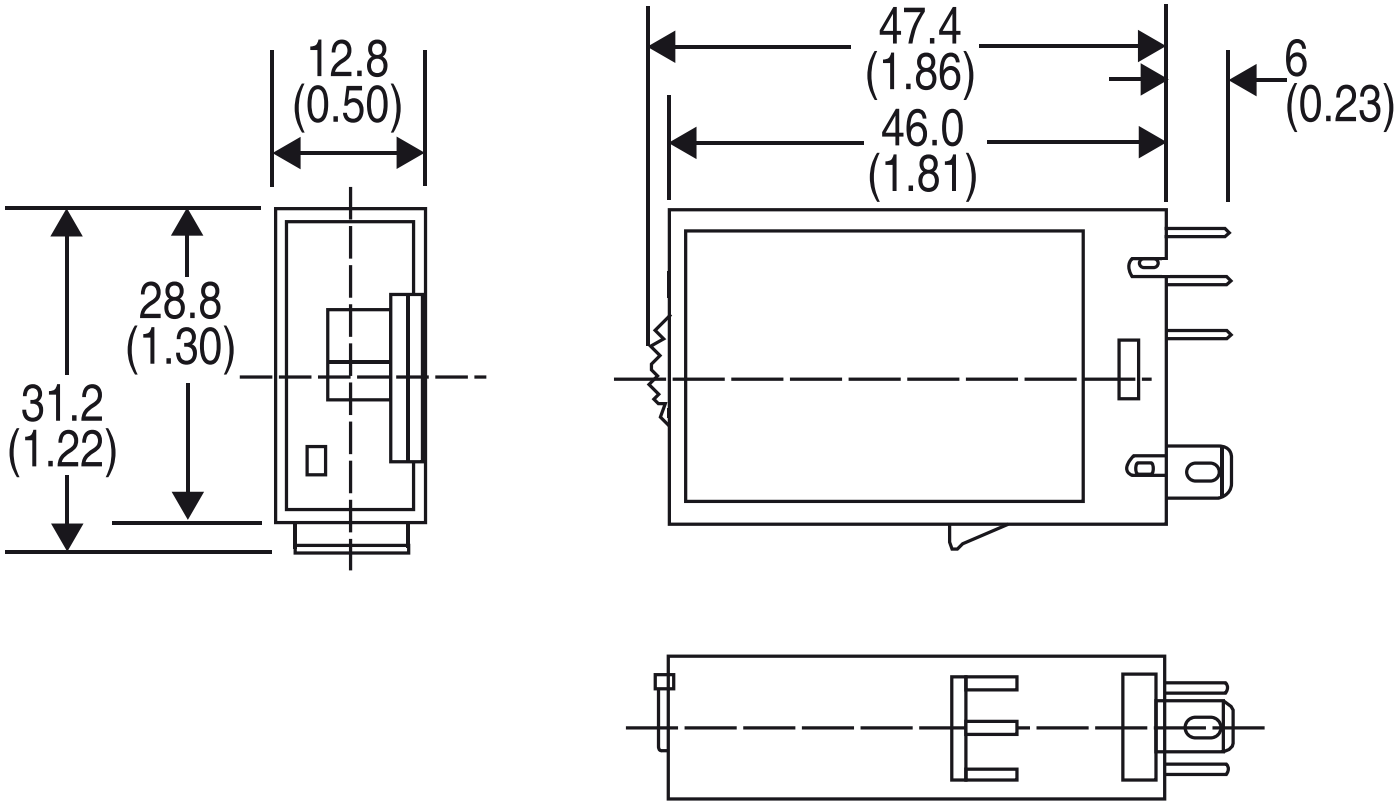

Bulletin 700-HNK41 SPDT Contact
Approximate Dimensions

Published on 16 April 2026